Ref constructeur : EAV5821701 / 0

Schéma de principe MONITORING PTR	GREEN YELLOW TOULOUSE

Ind rev	Date Date	Modification / Modification	Status	Nom/name	Visa	Nom/name	Visa	Nom/name	Visa	Archiv micro-filmed
				Dessiné/Drawn		Verifié/Checked		Approuve/Approved		
B	14/10/14	TQC Site	BPE	ALBORGHETTI		CHAVAT		ABBAS		
A	22/01/14	Doc. original	BPO	CAPARROS		CHAVAT		ABBAS		

Les informations techniques contenues dans ce document sont la propriete exclusive de SCHNEIDER ELECTRIC INDUSTRIES SA et ne peuvent être utilisees ou divulguees a des tiers quels qu'ils soient sans son accord ecrit. Seuls nous engagent pour execution les plans et schemas remis apres enregistrement de la commande.
All technical information contained in this document is the exclusive property of SCHNEIDER ELECTRIC INDUSTRIES SA and may neither be used nor disclosed without its prior written consent. Only those drawings and diagrams remitted after order booking are binding for execution.

Echelle
Scale

Unité / Department
Solution Centre

Code diffusion Distribution code	Projet - N°commande Project - Order N°	N°Clt	TOUL_SHP006 / B **ER7CO5278/SHP006**	Ind / rev **B**	Folio/Sheet

The technical information contained in this document is the exclusive property of Schneider Electric Industries S.A.S and cannot be used or disclosed to third parties of any kind without its written consent. Only those drawings and diagrams expressly stated after ordering and bearing the mention "As built" are valid. All devices shown in this diagrams are in open position, drawn out with operating mechanism discharged and all power sources off.

Les informations techniques contenues dans ce document sont la propriete exclusive de Schneider Electric Industries S.A.S et ne peuvent etre utilisees ou divulguees a des tiers quelconques sans son accord ecrit. Seuls nous engagent les plans et dessins expressément mentionnés lors de la commande. Les appareils représentés sur ce schéma sont en position ouvert - désarmés - débrochés - toutes sources coupées.

Ind Rev	Date Date	Modification / Modification
00	18/12/2013	Edition originale / First issue

Nom / Name	Visa	Nom / Name	Visa	Nom / Name	Visa	Archiv. Micro-filmed
TORTOROLO		GRUNWALD		KHELIL		
Dessine / Drawn		Verifie / Checked		Approuve / Approved		

PV MONITORING CONTROL CABINET
(PV MCC)
ADVANCED HD
BASE
WIRING

PV MONITORING CONTROL CABINET
(PV MCC)
ADVANCED HD
BASE

Echelle
Scale
1/1

Unite / Department
SOLAR BU

Schneider Electric

Code diffusion
Distribution code

Projet - No commande
Project - Order number

Validated for Pilot Run
Printed on 2014/01/10

EAV5821701

Indice Rev 00

Folio Sheet 001

A3 garde - 11/2006

The technical information contained in this document is the exclusive property of Schneider Electric Industries S.A.S and cannot be used or disclosed to third parties of any kind without its written consent. Only those drawings and diagrams marked "for Pilot Run" are to be used for work purposes. All devices shown in this document are in open position, drawn out with operating mechanism discharged and all power sources off.

Les informations techniques contenues dans ce document sont la propriete exclusive de Schneider Electric Industries S.A.S et ne peuvent etre utilisees ou divulguees a des tiers quels qu'ils soient sans son accord ecrit. Seuls nous engageant ceux portant la mention "pilotes et schemas en service" et ceux relatifs aux appareils representes sur ce schéma sont en position ouvert - désarmés - débrochés - toutes sources coupées.

Folio Sheet	Designation Designation	Indice de modification Revision
001	COVER PAGE	00
02	LIST OF SHEETS	00
03	LIST OF SHEETS	00
004	LEGEND OF SYMBOLS Part 1	00
005	LEGEND OF SYMBOLS Part 2	00
006	MARKING	00
007	HIGHER LEVEL DESIGNATION	00
008	LOCATION IDENTIFICATION	00
009	DEVICES IDENTIFICATION	00
010	SPECIFIC DEVICES IDENTIFICATION	00
011	SPECIFIC IDENTIFICATION AND MARKING FOR DEVICES AND CORDS	00
012	+24V DC POWER SUPPLY DIAGRAMM	00
013	+230V AC POWER SUPPLY DIAGRAMM	00
014	MONITORING DIAGRAMM	00
015	+24VDC POWER SUPPLY DISTRIBUTION	00
016	+24V DC POWER SUPPLY DISTRIBUTION	00
017	+24V DC POWER SUPPLY DISTRIBUTION FOR PROFIBUS CONNECTION	00
18	230V AC POWER SUPPLY HEATER	00
19	OPTICAL BOX	00
20	ETHERNET TCP/IP SWITCH	00
21	PROFIBUS REMOTE MASTER	00
22	PROFIBUS GATEWAY	00
23	INVERTER 1 AND 2 MODBUS CONNECTION	00
24	INVERTER 3 MODBUS CONNECTION	00
25	LV BOX MODBUS CONNECTION	00
26	RM6 CELLUL MODBUS CONNECTION	00
27	M340 AUTOMAT RACK	00
28	ADVANCED HD Digital Inputs	00
29	ADVANCED HD Digital Inputs	00
30	ADVANCED HD Digital Inputs	00
31	ADVANCED HD Digital Inputs	00
32	ADVANCED HD Analog Inputs	00
150	TERMINAL BLOCK : =+MCC-X2	00
151	TERMINAL BLOCK : =+MCC-X3	00
152	TERMINAL BLOCK : =+MCC-X4	00
153	TERMINAL BLOCK : =+MCC-X5	00
154	TERMINAL BLOCK : =+MCC-X9	00
155	TERMINAL BLOCK : =+MCC-X7	00
156	TERMINAL BLOCK : =+MCC-X20	00
157	TERMINAL BLOCK : =+MCC-X30	00
158	TERMINAL BLOCK : =+MCC-X40	00
159	TERMINAL BLOCK : =+MCC-X50	00

Archivage
Microfilmed

LIST OF SHEETS

PV MONITORING CONTROL CABINET
(PV MCC)
ADVANCED HD
BASE

Validated *for Pilot Run*
Printed on 2014/01/10

Schneider Electric

EAV5821701

Projet - No commande Project - Order No.	Indice Rev	Folio Sheet
	00	02

A3 recap 1 - 11/2006

Folio Sheet	Designation Designation	Indice de modification Revision
160	TERMINAL BLOCK : =+MCC-X60	00
500	EQUIPMENT LIST	00
501	EQUIPMENT LIST	00

The technical information contained in this document is the exclusive property of Schneider Electric Industries S.A.S and cannot be used or disclosed to third parties of any kind without its written consent. Only those drawings and diagrams marked "for order" are valid for execution. All devices shown in this diagram are in open position, drawn out with operating mechanism discharged and all power sources off.

Les informations techniques contenues dans ce document sont la propriete exclusive de Schneider Electric Industries S.A.S et ne peuvent etre utilisees ou divulguees a des tiers quels qu'ils soient sans son accord ecrit. Seuls nous engagent les schemas marques "pour execution". Les appareils representes sur ce schéma sont en position ouvert - désarmés - débrochés - toutes sources coupées.

Archivage
Microfilmed

LIST OF SHEETS

PV MONITORING CONTROL CABINET
(PV MCC)
ADVANCED HD
BASE

Validated for Pilot Run
Printed on 2014/01/10

Schneider Electric

EAV5821701

Projet - No commande Project - Order No.	Indice Rev	Folio Sheet
	00	03

SYMBOLE SYMBOL	CODE	LEGENDE DESCRIPTION	SYMBOLE SYMBOL	CODE	LEGENDE DESCRIPTION	SYMBOLE SYMBOL	CODE	LEGENDE DESCRIPTION
		CONTACT A FERMETURE MAKE CONTACT			DISPOSITIF D'ACCROCHAGE EN PRISE DEVICE FOR RESTRICTING MOVEMENT BLOCKED POSITION		G	ELEMENT DE PILE OU ACCUMULATEUR PRIMARU CELL OR ACCUMULATOR
		CONTACT A OUVERTURE BREAK CONTACT			DISPOSITIF D'ACCROCHAGE LIBERE DEVICE FOR RESTRICTING MOVEMENT UNBLOCKED POSITION			
		CONTACT INVERSEUR CHANGE OVER CONTACT			TERRE DE PROTECTION EARTH PROTECTION		H	LAMPE DE SIGNALISATION SIGNAL LAMP
		CONTACT NO TEMPORISE AU TRAVAIL MAKE CONTACT DELAY WHEN OPERATING			TERRE FONCTIONNELLE FUNCTIONNAL EARTH		H	VOYANT MECANIQUE DE SIGNALISATION MECHANICAL INDICATOR
		CONTACT NF TEMPORISE AU TRAVAIL BREAK CONTACT DELAY WHEN OPERATING			TERRE EARTH		H	AVERTISSEUR HORN
		CONTACT NO TEMPORISE AU REPOS MAKE CONTACT DELAY WHEN RELEASING	P	B	COMMANDE PAR PRESSION OPERATED BY PRESSURE		H	SONNERIE HORN
		CONTACT NF TEMPORISE AU REPOS MAKE CONTACT DELAY WHEN RELEASING	U	B	COMMANDE PAR TEMPERATURE OPERATED BY TEMPERATURE			
		CONTACT DE PASSAGE A LA FERMETURE PASSING MAKE CONTACT CLOSING NOMENTARILY DURING OPERATION	h	B	COMMANDE PAR NIVEAU OPERATED BY LEVEL		KA	RELAIS - ORGANE DE COMMANDE RELAY - COIL
		CONTACT DE PASSAGE A L'OUVERTURE PASSING BREAK CONTACT CLOSING NOMENTARILY DURING OPERATION					KA	RELAIS A MISE AU REPOS RETARDEE SLOW RELEASING RELAY COIL
		CONTACT A FERMETURE ANTERIEURE AUX AUTRES CONTACTS DE L'ENSEMBLE MAKE CONTACT WICH OPERATES EARLIER RELATIVE TO THE ASSEMBLY OF CONTACT		C	CAPACITE - CONDENSATEUR CAPACITANCE - CAPACITOR		KA	RELAIS A MISE AU TRAVAIL RETARDEE SLOW OPERATING RELAY COIL
		CONTACT A FERMETURE POSTERIEURE AUX AUTRES CONTACTS DE L'ENSEMBLE MAKE CONTACT WICH OPERATES LATER RELATIVE TO THE ASSEMBLY OF CONTACT	QFO.10	E	RESISTANCE DE CHAUFFAGE HEATING RESISTOR		KM	CONTACTEUR CONTACTOR
Q2		CONTACT A OUVERTURE POSTERIEURE AUX AUTRES CONTACTS DE L'ENSEMBLE BREAK CONTACT WICH OPERATES LATER RELATIVE TO THE ASSEMBLY OF CONTACT						
		CONTACT A OUVERTURE ANTERIEURE AUX AUTRES CONTACTS DE L'ENSEMBLE MAKE CONTACT WICH OPERATES EARLIER RELATIVE TO THE ASSEMBLY OF CONTACT		F	PARAFOUDRE LIGHTNING ARRESTER		P	INDICATEUR - SYMBOLE GENERAL INDICATING INSTRUMENT - GENERAL SYMBOL
		DISPOSITIF D'EMBROCHAGE WITHDRAWABLE DEVICE		F	COUPE CIRCUIT FUSE		P	ENREGISTREUR- SYMBOLE GENERAL RECORDING INSTRUMENT - GENERAL SYMBOL
		VERROUILLAGE MECANIQUE MECHANICAL INTERLOCK		F	DETECTION DE SURINTENSITE - EFFET THERMIQUE OVERCURRENT DETECTION - THERMAL EFFECT		P	COMPTEUR- SYMBOLE GENERAL INTEGRATING METER - GENERAL SYMBOL
		ENROULEMENT WINDING		F	DETECTION DE SURINTENSITE - EFFET MAGNETIQUE OVERCURRENT DETECTION - MAGNETIC EFFECT			

The technical information contained in this document is the exclusive property of Schneider Electric Industries S.A.S and cannot be used or disclosed to third parties of any kind without its written consent. Only those drawings and diagrams marked "for Pilot Run" are approved for use with the equipment described. All devices shown in the diagrams are in open position, drawn out with operating mechanism discharged and all power sources off.

Les informations techniques contenues dans ce document sont la propriete exclusive de Schneider Electric Industries S.A.S et ne peuvent etre utilisees ou divulguees a des tiers quels qu'ils soient sans son accord ecrit. Seuls nous engagent les dessins et schemas marqués "pour Pilotage" lies a l'equipement decrit. Les appareils representes sur ce schéma sont en position ouvert - désarmés - débrochés - toutes sources coupées.

Ind. Rev	Date Date	Modification / Modification	Archiv. Micro-filmed	Ind. Rev	Date Date	Modification / Modification	Archiv. Micro-filmed
00	18/12/2013	Edition originale / First issue					

LEGEND OF SYMBOLS
Part 1

PV MONITORING CONTROL CABINET
(PV MCC)
ADVANCED HD
BASE

Validated for Pilot Run
Printed on 2014/01/10

Schneider Electric

EAV5821701

Projet - No commande / Project - Order No.	Indice Rev	Folio Sheet
	00	004

SYMBOLE SYMBOL	CODE	LEGENDE DESCRIPTION	SYMBOLE SYMBOL	CODE	LEGENDE DESCRIPTION	SYMBOLE SYMBOL	CODE	LEGENDE DESCRIPTION
	Q	INTERRUPTEUR SWITCH		S	COMMANDE PAR LEVIER OPERATED BY LEVER		U	CONVERTISSEUR TRANSDUCER
	Q	DISJONCTEUR CIRCUIT BREAKER		S	COMMANDE PAR CLEF OPERATED BY KEY			
	Q	SECTIONNEUR DISCONNECTOR (ISOLATOR)		S	TL OU TPL POUR SECTIONNEUR DISCREPANCY SWITCH FOR DISCONNECTOR		V	FONCTION REDRESSEUSE RECTIFYING FUNCTION
	Q	INTERRUPTEUR SECTIONNEUR SWITCH DISCONNECTOR		S	TL OU TPL POUR DISJONTEUR DISCREPANCY SWITCH FOR CB			
	Q	COMMANDE PAR MOTEUR OPERATED BY MOTOR		S	BOITIER DE SIGNALISATION ALARM ANNUNCIATOR			
	R	SHUNT SHUNT		T	TRANSFORMATEUR DE COURANT UNIIFILAIRE CURRENT TRANSFORMER SLD		X	BOITE D'ESSAI TEST BLOCK
	R	RESISTANCE RESISTOR		T	TRANSFORMATEUR DE COURANT MULTIFILAIRE CURRENT TRANSFORMER TRIPOLAR DRAWING		X	BORNE SIMPLE ORDINARY TERMINAL BLOCK
				T	TRANSFORMATEUR DE TENSION MULTIFILAIRE VOLTAGE TRANSFORMER TRIPOLAR DRAWING		X	BORNE SECTIONABLE INTERRUPTIBLE TERMINAL BLOCK
	S	CONTACT DE POSITION NO MAKE CONTACT OF LIMIT SWITCH		T	ENROULEMENT DE TRANFORMATEUR DE PUISSANCE - MULTIFILAIRE POWER TRANSFORMER WINDING - TRIPOLAR DRAWING		X	BORNE FUSIBLE FUSE CARIER TERMINAL BLOCK
	S	CONTACT DE POSITION NF BREAK CONTACT OF LIMIT SWITCH		T	ENROULEMENT DE TRANFORMATEUR DE PUISSANCE - MULTIFILAIRE POWER TRANSFORMER WINDING - TRIPOLAR DRAWING		X	BORNE DIODE DIODE TERMINAL BLOCK
	S	COMMUTATEUR UNIPOLAIRE A N DIRECTIONS SINGLE POLE N POSITIONS SWITCH		T	TRANFORMATEUR DE PUISSANCE - UNIFILAIRE POWER TRANSFORMER - SLD		X	BORNE RESISTANCE RESISTOR TERMINAL BLOCK
	S	COMMANDE PAR POUSSOIR OPERATED BY PUSHING		T	AUTOTRANFORMATEUR DE PUISSANCE - UNIFILAIRE POWER AUTOTRANSFORMER WINDING - SLD		X	BROCHE MALE DE CONNECTEUR MAL CONNECTOR PIN
	S	COMMANDE PAR TIRETTE OPERATED BY PULLING		T	TRANSFORMATEUR D'ISOLEMENT ISOLATING TRANSFORMER		X	BROCHE FEMELLE DE CONNECTEUR FEMALE CONNECTOR PIN
	S	COMMANDE ROTATIVE OPERATED BY TURNING						
	S	BOUTON POUSSOIR COUP DE POING EMERGENCY SWITCH						

The technical information contained in this document is the exclusive property of Schneider Electric Industries S.A.S and cannot be used or disclosed to third parties of any kind without its written consent. Only those drawings and diagrams specifically agreed upon in writing are to be used for execution. All drawings and diagrams are in open position, drawn out with operating mechanism discharged and all power sources off.

Les informations techniques contenues dans ce document sont la propriete exclusive de Schneider Electric Industries S.A.S et ne peuvent etre utilisees ou divulguees a des tiers quels qu'ils soient sans son accord ecrit. Seuls nous engagent ceux ecrits et signes. Les plans et schemas annexes ne sont valables qu'apres signature. Les sources d'energie sur ce schéma sont en position ouvert - désarmés - débrochés - toutes sources coupées.

Ind. Rev	Date Date		Archiv. Micro-filmed	Ind. Rev	Date Date		Archiv. Micro-filmed
00	18/12/2013	Edition originale / First issue					
		Modification / Modification				Modification / Modification	

LEGEND OF SYMBOLS
Part 2

PV MONITORING CONTROL CABINET
(PV MCC)
ADVANCED HD
BASE

Validated for Pilot run
Printed on 2014/01/10

Schneider Electric

EAV5821701

Projet - No commande
Project - Order No.

Indice Rev 00

Folio Sheet 005

A3 suite - 11/2006

LE REPERAGE DES APPAREILS EST CONFORME A LA NORME CEI. ADDITION DE 4 BLOCS DE CARACTERES

= ANN	+ AANN	- AA*N*N	: CC*C*
bloc 1*	bloc 2	bloc 3	bloc 4

A = Alphabétique
N = Numérique
C = Alphanumérique
* = facultatif

Ex : =D01 +AB01 -KA1 :13

- :13 — repère du N° de borne
- -KA1 — repère du matériel (racine et n° d'ordre)
- +AB01 — repère de l'emplacement physiquel (zone ; localisation)
- =D01 — repère essentiel (ensemble ou fonction)

bloc 1 =ANN "=" symbole distinctif **repère essentiel**

Repère principal caractérisant chaque subdivision importante d'une installation ou ensemble (fonctionnel). Il est facultatif.
Le 1° caractère est choisi dans la "TABLE 1.
Cette table donne les lettres repères des niveaux de tension et des fonctions non spécifiques à une travée ou un niveau de tension.

bloc 2 +AANN "+" symbole distinctif **repère de l'emplacement physique**

Repère de l'adresse physique du matériel.
Repère de l'équipement qui contient le matériel (choix des deux premiers caractères dans la "TABLE 2").

bloc 3 -AA*N*N "-" symbole distinctif **repère matériel**

Repère complet du nom de l'appareil. La première lettre indique la fonction générale de l'appareil. Choix "TABLE 3".

bloc 4 :CC*C* ":" symbole distinctif **repère du N° de borne**

Repère composé indifféremment de lettres ou de chiffres.

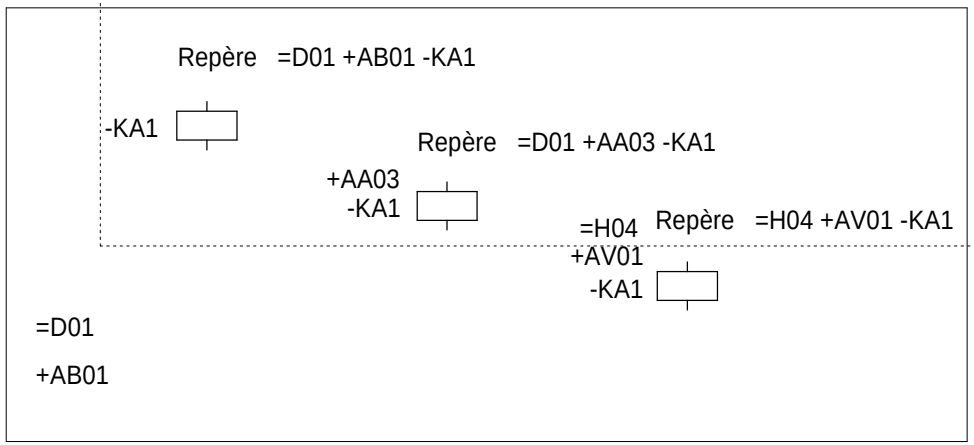

ACCORDING TO STANDARD, MARKING OF EQUIPMENTS IS MADE WITH 4 BLOCKS OF CHARACTERS

= ANN	+ AANN	- AA*N*N	: CC*C*
block 1*	block 2	block 3	block 4

A = Alphabetic
N = Numeric
C = Alphanumeric
* = optional

Ex : =D01 +AB01 -KA1 :13

- :13 — terminal designation
- -KA1 — identification of item (root & sequence N°)
- +AB01 — location of item (zone ; location)
- =D01 — higher-level designation (set or function)

block 1 =ANN "=" distinctive symbol **higher level designation**

Item designation for any major part of plant or function. Optional.
First character is given by "TABLE 1".
This table gives codes for voltage levels and for no attached functions to a particular bay or voltage level.

block 2 +AANN "+" distinctive symbol **location of item**

Designation for location item.
Indicates equipment wich conttains the item (choice of the 2 first characters "TABLE 2").

block 3 -AA*N*N "-" distinctive symbol **identification of item**

Complete designation of item identification. 1st character indicates general function of item. Choice "TABLE 3".

block 4 :CC*C* ":" distinctive symbol **terminal designation**

Designation composed of letters or numbers.

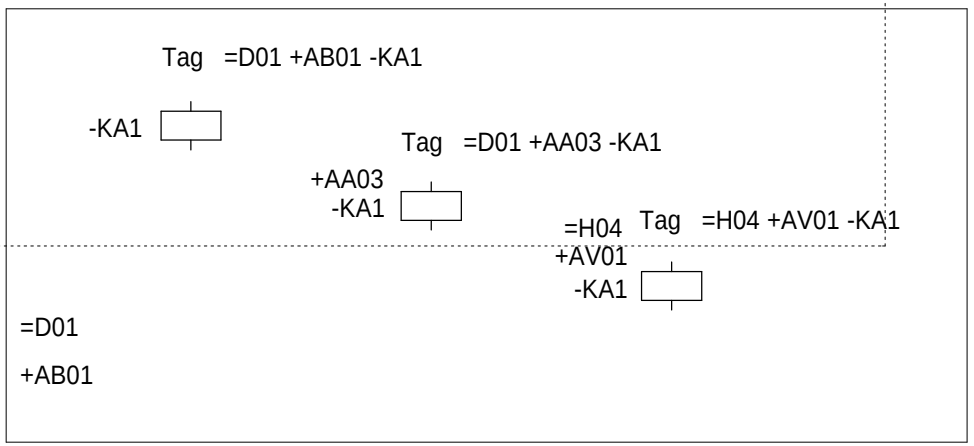

The technical information contained in this document is the exclusive property of Schneider Electric Industries S.A.S and cannot be used or disclosed to third parties of any kind without its written consent. Only those drawings and information specifically defined for the purpose of execution of the contract are to be used. All drawings are in open position, drawn out with operating mechanism discharged and all power sources off.

Les informations techniques contenues dans ce document sont la propriete exclusive de Schneider Electric Industries S.A.S et ne peuvent etre utilisees ou divulguees a des tiers quels qu'ils soient sans son accord ecrit. Seuls nous engageant ont ete retenus les plans et schemas annexes au contrat specifiant les operations a effectuer sur ce schéma sont en position ouvert - désarmés - débrochés - toutes sources coupées.

Ind. Rev	Date Date		Archiv. Micro-filmed	Ind. Rev	Date Date	Modification / Modification	Archiv. Micro-filmed
00	18/12/2013	Edition originale / First issue					

MARKING

PV MONITORING CONTROL CABINET (PV MCC) ADVANCED HD BASE

Validated for Pilot run
Printed on 2014/01/10

Schneider Electric

EAV5821701

Projet - No commande / Project - Order No.

Indice Rev 00

Folio Sheet 006

NIVEAUX DE TENSION

LETTRES	TENSIONS
B	> 420kV
C	380 à 419kV
D	220 à 379kV
E	110 à 219kV
F	60 à 109kV
G	45 à 59kV
H	30 à 44kV
J	20 à 29kV
K	10 à 19kV
L	6 à 9kV
M	1 à 5kV
N0	500 - 999VCA
N1	300 - 499VCA
N2	50 - 299VCA
N3	< 49VCA
N5	> 250VCC
N6	150 - 249VCC
N7	50 - 149VCC
N8	25 - 49VCC
N9	< 24VCC

FONCTIONS NON SPECIFIQUES A UNE TRAVEE OU A UN NIVEAU DE TENSION

LETTRES	FONCTIONS
Q	MESURE - COMPTAGE - ENREGISTREMENT
R	PROTECTIONS
S	ECLAIRAGE - CLIMATISATION - INSTAL DOMESTIQUE
T	TRANSFORMATEUR
U	COMMUNS - TRANCHE GENERALE
V	
W	INTERFACES
X	CONSIGNATEURS - OSCILLOPERTURBOGRAPHE
Y	SYSTEME TELECOMMUNICATION
Z	CABLE

Le numéro de la travée est donné par deux chiffres caractéristiques de 01 à 99.
Les chiffres "00" sont utilisés pour les équipements communs à un niveau de tension et plusieurs travées.

ex : =E00, repère essentiel de l'ensemble fonctionnel commun à toutes les travées 132kV.
+E00.AB01, armoire de relayage N°1 (protection bar re)

EXEMPLES : +E04 Indique que l'emplacement appartient en totalité à la travée 110kV N°04
=C05 Indique la travée 400kV N°05
=R01 Indique l'ensemble fonctionnel "PROTECTION INCENDIE" N°01

LEVEL VOLTAGE

LETTRES	VOLTAGE
B	> 420kV
C	380 à 419kV
D	220 à 379kV
E	110 à 219kV
F	60 à 109kV
G	45 à 59kV
H	30 à 44kV
J	20 à 29kV
K	10 à 19kV
L	6 à 9kV
M	1 à 5kV
N0	500 - 999VAC
N1	300 - 499VAC
N2	50 - 299VAC
N3	< 49VAC
N5	> 250VDC
N6	150 - 249VDC
N7	50 - 149VDC
N8	25 - 49VDC
N9	< 24VDC

NO ATTACHED FUNCTIONS TO A PARTICULAR BAY OR A VOLTAGE LEVEL

LETTRES	VOLTAGE
Q	MEASURING - RECORDING - METERING
R	PROTECTIONS
S	LIGHTING, AIR CONDITIONING, DOMESTIC
T	TRANSFORMER
U	COMMONS
V	
W	INTERFACES
X	EVENTS & FAULT RECORDER, SUPERVISION
Y	TELECOMMUNICATION SYSTEM, ALARMS STATUS
Z	CABLE

Bay number is given by two figures from 01 to 99.
Figures "00" are used for common equipment to a voltage level and several bays

eg ; =E00, higher level of designation 132kV busbar
+E00, AB01, 132kV common relaying cubicle N°1 (bus bar protection)

EXAMPLES : +E04 Indicates that the localisation is fully attached to bay 110kV N°04
=C05 Indicates bay 400kV N°05
=R01 Indicates the function "FIRE PROTECTION" N° 01

The technical information contained in this document is the exclusive property of Schneider Electric Industries S.A.S and cannot be used or disclosed to third parties of any kind without its written consent. Only those drawings and diagrams bearing the mention "Validated for Pilot Run" are to be considered valid for work purposes. Drawings are in open position, drawn out with operating mechanism discharged and all power sources off.

Les informations techniques contenues dans ce document sont la propriete exclusive de Schneider Electric Industries S.A.S et ne peuvent etre utilisees ou divulguees a des tiers quels qu'ils soient sans son accord ecrit. Seuls nous engageant ont ete retenus les plans et schemas bearant la mention "Valide pour mise au point". Les appareils representes sur ce schéma sont en position ouvert - désarmés - débrochés - toutes sources coupées.

Ind. Rev	Date Date		Archiv. Micro-filmed	Ind. Rev	Date Date	Modification / Modification	Archiv. Micro-filmed
00	18/12/2013	Edition originale / First issue					

HIGHER LEVEL DESIGNATION

PV MONITORING CONTROL CABINET (PV MCC) ADVANCED HD BASE

Validated for Pilot Run
Printed on 2014/01/10

Schneider Electric

EAV5821701

Projet - No commande / Project - Order No.

Indice Rev 00

Folio Sheet 007

A3 suite - 01/2008

CODE	DESIGNATION
AC	Tableau de commande et protection Control and relay board
AD	Tableau de comptage - mesure Metering - Measuring board
AE	Armoire enregistreur de pertubations Fault recorder cubicle
AF	Armoire de travée Marshalling kiosk
AG	Coffret intensité Current box
AH	Coffret tension Voltage box
AJ	Armoire - coffret d'éclairage Lighting cubicle - box
AL	Armoire monitoring de livraison (PDL) Monitoring delivery board (PDL)
AM	Coffret auxiliaires transformateur Transformer auxiliaries box
AN	Coffret régleur transformateur On load tap changer box
AO	Armoire / coffret synchro Synchro panel
AP	Armoire monitoring de transformation (PTR) Monitoring transformer board (PTR)

CODE	DESIGNATION
AQ	Armoire contrôle et régulation tension du transformateur Transformer auto voltage regulation cubicle
AS	Armoire auxiliaires courant alternatif AC low voltage auxiliaries cubicle
AT	Armoire auxiliaires courant continu DC low voltage auxiliaries cubicle
AU	Armoire auxiliaires groupe de secours Emergency generator auxiliaries cubicle
AV	Caisson-coffret BT des cellules MT MV SWGR low voltage cubicle-box
AW	Armoire des auxiliaires disjoncteur Circuit breaker auxiliaries cubicle
AX	Armoire des auxiliaires sectionneur Disconnecting switch auxiliaries cubicle

The technical information contained in this document is the exclusive property of Schneider Electric Industries S.A.S and cannot be used or disclosed to third parties of any kind without its written consent. Only those drawings and diagrams marked "Validated" or "Approved" are valid for construction purposes. All drawings show the voltages are in open position, drawn out with operating mechanism discharged and all power sources off.

Les informations techniques contenues dans ce document sont la propriete exclusive de Schneider Electric Industries S.A.S et ne peuvent etre utilisees ou divulguees a des tiers quels qu'ils soient sans son accord ecrit. Seuls nous engageant sur ce schéma sont en position ouvert - désarmés - débrochés - toutes sources coupées.

Ind. Rev	Date Date		Archiv. Micro-filmed	Ind. Rev	Date Date		Archiv. Micro-filmed
00	18/12/2013	Edition originale / First issue					

LOCATION IDENTIFICATION

PV MONITORING CONTROL CABINET (PV MCC)
ADVANCED HD BASE

Validated for Pilot Run
Printed on 2014/01/10

Schneider Electric

EAV5821701

Projet - No commande / Project - Order No.

Indice Rev 00

Folio Sheet 008

A3 suite - 01/2008

CODE	DESIGNATION - (Famille de symbole) / (Family of symbol)
A	Ensemble, Sous-ensemble - (démarreur de moteur, automates) Assemblie, Subassemblie - (motor starter, programmable logic device)
B	Transducteur de grandeur non électrique en grandeur électrique - (détecteur, capteur) Transducer from non electrical to electrical quantity - (detector, sensor)
C	Condensateur Capacitor
D	Operateur binaire, Mise en mémoire, Temporisation Binary operator, Storage device delay, Delay device
E	Matériel divers - (chauffage, éclairage, divers) Miscellaneous - (heating, lighting, various)
F	Dispositif de protection - (fusible, protection, relais thermique & magnétique, relais de mesure) Protective device - (fuse, thermal & magnetic relay, measuring relay)
G	Générateur, Alimentation de puissance - (générateur, batterie) Generator, Power supply - (generator, battery)
H	Dispositif de signalisation - (signalisation) Signalling device - (signalling)
KA	Relais, Contacteur - (relais auxiliaire, contact) Relay, Contactor - (auxiliairy relay, contact)
KM	Relais, Contacteur - (contacteur de puissance, contact) Relay, Contactor - (power contactor, contact)
L	Reactance - (inductance) Reactor - (inductance)
M	Moteur Motor
N	Dispositif analogique-numérique Analogue digital device
P	Instruments de mesure - (appareil de mesure, indicateur, enregistreur) Measuring equipment - (measuring instrument)
Q	Appareil de connexion pour circuit de puissance - (disjoncteur, interrupteur, sectionneur, contacteur disj) Switching device for power circuit - (circuit breaker,switch, disconnector,circuit breaker contactor)

CODE	DESIGNATION - (Famille de symbole) / (Family of symbol)
R	Résistance - (résistance, shunt) Resistor - (resistor, shunt)
S	Appareil de connexion pour circuit de conduite, Selecteur - (bouton, commutateur,fin de course) Switching device for control, Circuit-selector - (button, turn switch, limit switch)
T	Transformateur Transformer
U	Transducteur, Convertisseur Transducer, Converter
V	Semiconducteur Semiconductor
W	Conducteur - Câble Conductor - Cable
X	Bornes - (prise de courant, répartiteur, borne) Terminals - (plug-in soket, distributor, terminal)
Y	Appareil mécanique actionné électriquement - (frein, électrovane) Electrical operated mechanical device - (brake, electrovalve)
Z	Régulateur, Filtre, Correcteur Regulator, Filter, Compandor

The technical information contained in this document is the exclusive property of Schneider Electric Industries S.A.S and cannot be used or disclosed to third parties of any kind without its written consent. Only those drawings and diagrams marked "certified" or "for approval" are to be used for execution. All devices shown in the diagrams are in open position, drawn out with operating mechanism discharged and all power sources off.

Les informations techniques contenues dans ce document sont la propriete exclusive de Schneider Electric Industries S.A.S et ne peuvent etre utilisees ou divulguees a des tiers quels qu'ils soient sans son accord ecrit. Seuls nous engageant ont ete ceux marques "certifie" ou "pour approbation". Les appareils representes sur ce schéma sont en position ouvert - désarmés - débrochés - toutes sources coupées.

+ =

Ind. Rev	Date Date		Archiv. Micro-filmed	Ind. Rev	Date Date	Modification / Modification	Archiv. Micro-filmed
00	18/12/2013	Edition originale / First issue					

DEVICES IDENTIFICATION

PV MONITORING CONTROL CABINET
(PV MCC)
ADVANCED HD
BASE

Validated for Pilot Run
Printed on 2014/01/10

Schneider Electric

EAV5821701

Projet - No commande
Project - Order No.

Indice Rev 00

Folio Sheet 009

CODE	DESIGNATION - (Famille de symbole) / (Family of symbol)
INVi	Inverter i
INTi	TELEFAST ABE7 Sub-base i
AP1R1	Programmable Automat 1 Rack 1
XF01	OPTICAL Box 1
UABi	PROFIBUS Isolator - Repeater Box i
PRM	PROFIBUS REMOTE MASTER
WO00i	OPTICAL FIBER Cord i
WET00i	ETHERNET TCP/IP Cord i
WM00i	RS485 MODBUS Serial Cord i
WP00i	PROFIBUS Cord i
WINTi	TELEFAST ABE7 Sub-bases Cord i

CODE	DESIGNATION - (Famille de symbole) / (Family of symbol)

=
+MCC

The technical information contained in this document is the exclusive property of Schneider Electric Industries S.A.S and cannot be used or disclosed to third parties of any kind without its written consent. Only those drawings and diagrams marked for order with an asterisk (*) are valid for execution. All devices shown in the diagrams are in open position, drawn out with operating mechanism discharged and all power sources off.

Les informations techniques contenues dans ce document sont la propriete exclusive de Schneider Electric Industries S.A.S et ne peuvent etre utilisees ou divulguees a des tiers quels qu'ils soient sans son accord ecrit. Seuls nous engagent ceux marques d'un asterisque (*) et faisant l'objet d'une commande. Les appareils representes sur ce schéma sont en position ouvert - désarmés - débrochés - toutes sources coupées.

Ind. Rev	Date Date	Modification / Modification	Archiv. Micro-filmed	Ind. Rev	Date Date	Modification / Modification	Archiv. Micro-filmed
00	18/12/2013	Edition originale / First issue					

SPECIFIC DEVICES IDENTIFICATION

PV MONITORING CONTROL CABINET (PV MCC) ADVANCED HD BASE

Validated for Pilot run Printed on 2014/01/10

Schneider Electric

EAV5821701

Projet - No commande / Project - Order No.

Indice Rev 00

Folio Sheet 010

WIRING IDENTIFICATION

POWER WIRING

400V ALTERNATIF CURRENT

PHASE : BLACK

NEUTRAL : B LUE

230V ALTERNATIF CURRENT

PHASE : RED

NEUTRAL : BLUE

EARTH PROTECTION

PE : GREEN / YELLOW

CONTROL WIRING

15V or 24 DIRECT CURRENT :

+15V o r + 24V : RED

-15V o r -24 V : W HITE GROUND or 0V : GREEN

CONTROL CIRCUIT SUPPLY BY AN EXTERNAL SOURCE : ORANGE

INSTRUMENTATION WIRING

SEE DETAILS IN SPECIFIC CABLES LIST

WIRES TYPE

H07V2K FOR THE CONTROL

H07V2K FOR THE POWER

SEE THE SPECIFIC CABLES LIST FOR THE INSTRUMENTATION

GENERAL

ONE WIRE FOR A TERMINAL BLOCK

MAXIMUM TWO PROTECTION WIRES MUST BE CONNECTED TO ONE BLOCK

MARK

LABEL TYPE

WIRING MARKING

MARK SHEET - NUMBER AT EACH END FOR CONNEXIONS

CIRCUIT BREAKER EX : Q1 : 1

TERMINAL NUMBER

DEVICE TYPE

TERMINAL BLOCK EX : X3 : 1

TERMINAL NUMBER

DEVICE TYPE

DEVICES MARKING

MARK ROOT - NUMBER

DEVICE EX : Q 1

DEVICE NUMBER

DEVICE TYPE

CORD AND CABLES MARKING

MARK ROOT - NUMBER

CABLE EXAMPLES :

ETHERNET TCP/IP CABLE 1 : WET 001

RS485 MODBUS SERIAL CABLE : WM 001

CABLE NUMBER

CABLE DESIGNATION

=

+MCC

The technical information contained in this document is the exclusive property of Schneider Electric Industries S.A.S and cannot be used or disclosed to third parties of any kind without its written consent. Only those drawings and diagrams marked "for execution" or "for approval" are intended for execution. Diagrams are shown in the diagrams are in open position, drawn out with operating mechanism discharged and all power sources off.

Les informations techniques contenues dans ce document sont la propriete exclusive de Schneider Electric Industries S.A.S et ne peuvent etre utilisees ou divulguees a des tiers quels qu'ils soient sans son accord ecrit. Seuls nous engageant sur ce schéma sont en position ouvert - désarmés - débrochés - toutes sources coupées.

Ind. Rev	Date Date		Archiv. Micro-filmed	Ind. Rev	Date Date	Modification / Modification	Archiv. Micro-filmed
00	18/12/2013	Edition originale / First issue					

SPECIFIC IDENTIFICATION AND MARKING FOR DEVICES AND CORDS

PV MONITORING CONTROL CABINET (PV MCC) ADVANCED HD BASE

Validated for Pilot run Printed on 2014/01/10

Schneider Electric

EAV5821701

Projet - No commande / Project - Order No.

Indice Rev 00

Folio Sheet 011

A3 suite - 01/2008

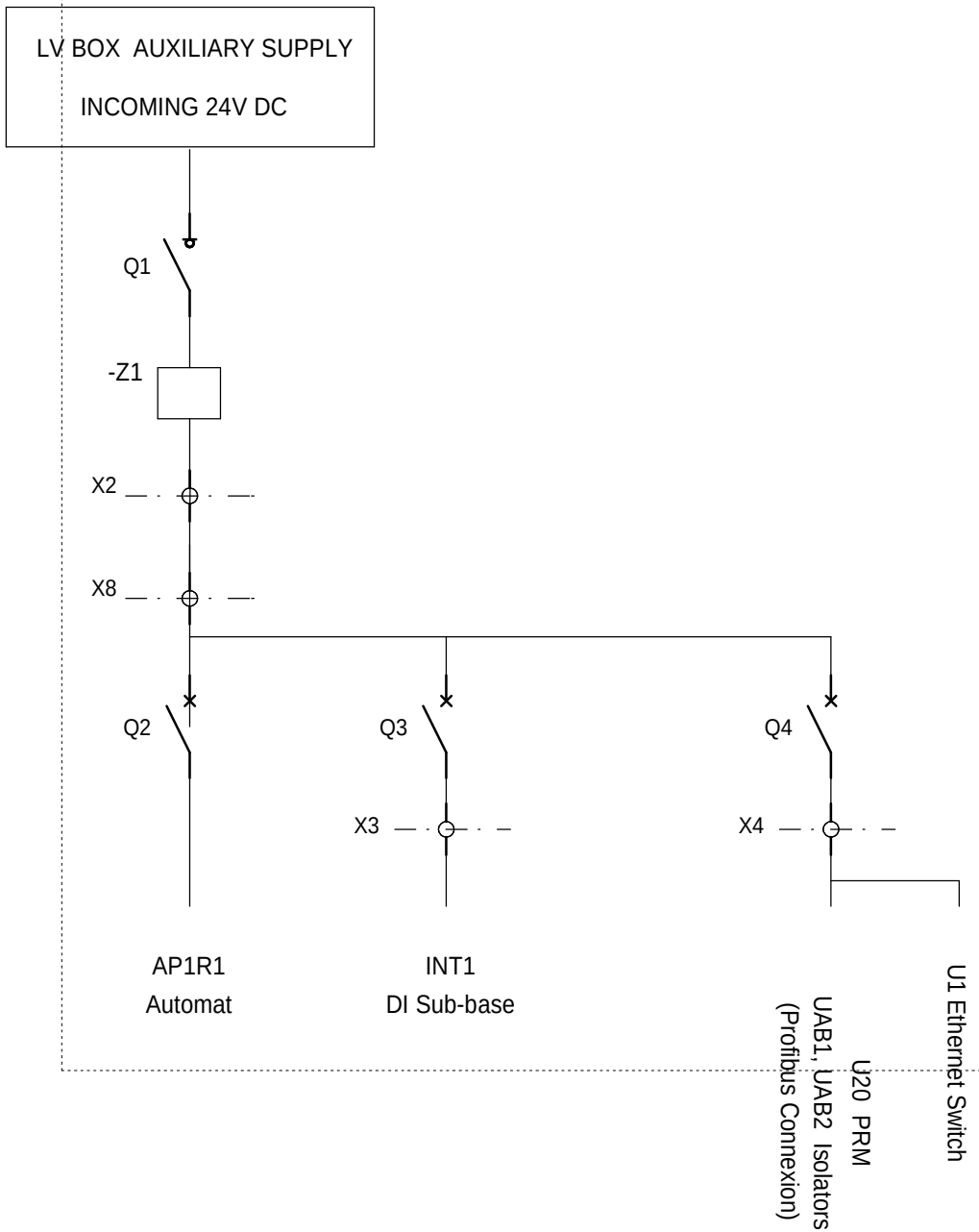

=
+MCC

The technical information contained in this document is the exclusive property of Schneider Electric Industries S.A.S and cannot be used or disclosed to third parties of any kind without its written consent. Only those drawings and diagrams marked "certified" or "for approval" are valid for execution. All devices shown in the diagrams are in open position, drawn out with operating mechanism discharged and all power sources off.

Les informations techniques contenues dans ce document sont la propriete exclusive de Schneider Electric Industries S.A.S et ne peuvent etre utilisees ou divulguees a des tiers quels qu'ils soient sans son accord ecrit. Seuls nous engagent ceux dessines et/ou marques "certifie" ou "pour approbation". Les appareils representes sur ce schéma sont en position ouvert - désarmés - débrochés - toutes sources coupées.

Ind. Rev	Date Date	Modification / Modification	Archiv. Micro-filmed	Ind. Rev	Date Date	Modification / Modification	Archiv. Micro-filmed
00	18/12/2013	Edition originale / First issue					

+24V DC POWER SUPPLY DIAGRAMM

PV MONITORING CONTROL CABINET
(PV MCC)
ADVANCED HD
BASE

Validated for Pilot Run
Printed on 2014/01/10

Schneider Electric

EAV5821701

Projet - No commande
Project - Order No.

Indice Rev 00

Folio Sheet 012

A3 suite - 01/2008

The technical information contained in this document is the exclusive propery of Schneider Electric Industries S.A.S and cannot be used or disclosed to third parties of any kind without its written consent. Only those drawings and diagrams marked certified are to be used for execution. All drawings shown in this document are in open position, drawn out with operating mechanism discharged and all power sources off.

Les informations techniques contenues dans ce document sont la propriete exclusive de Schneider Electric Industries S.A.S et ne peuvent etre utilisees ou divulguees a des tiers quels qu'ils soient sans son accord ecrit. Seuls nous engageant pour ce document, les plans certifies ecrits sont ceux que nous avons remis a notre representant. Les appareils sur ce schéma sont en position ouvert - désarmés - débrochés - toutes sources coupées.

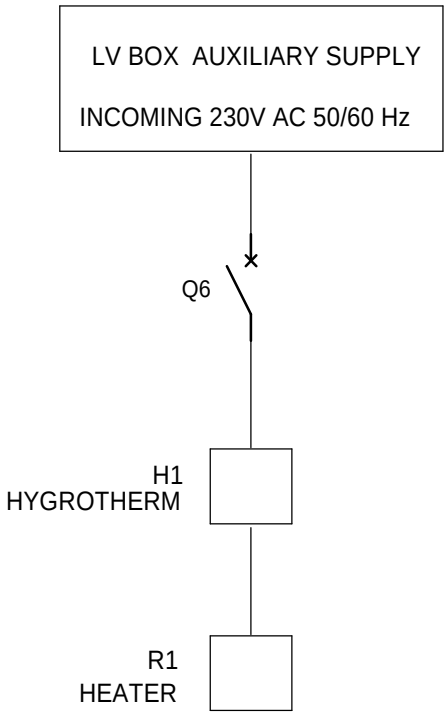

+MCC

Rev.	Date	Modification	Archiv. Micro-filmed	Rev.	Date	Modification	Archiv. Micro-filmed
00	18/12/2013	Edition originale					

+230V AC POWER SUPPLY DIAGRAMM

PV MONITORING CONTROL CABINET (PV MCC) ADVANCED HD BASE

Validated for Pilot Run Printed on 2014/01/10

Schneider Electric

EAV5821701

Projet - Ordre de fabrication | Indice | Feuille
00 | 013

A3 E=mc² 05/2008

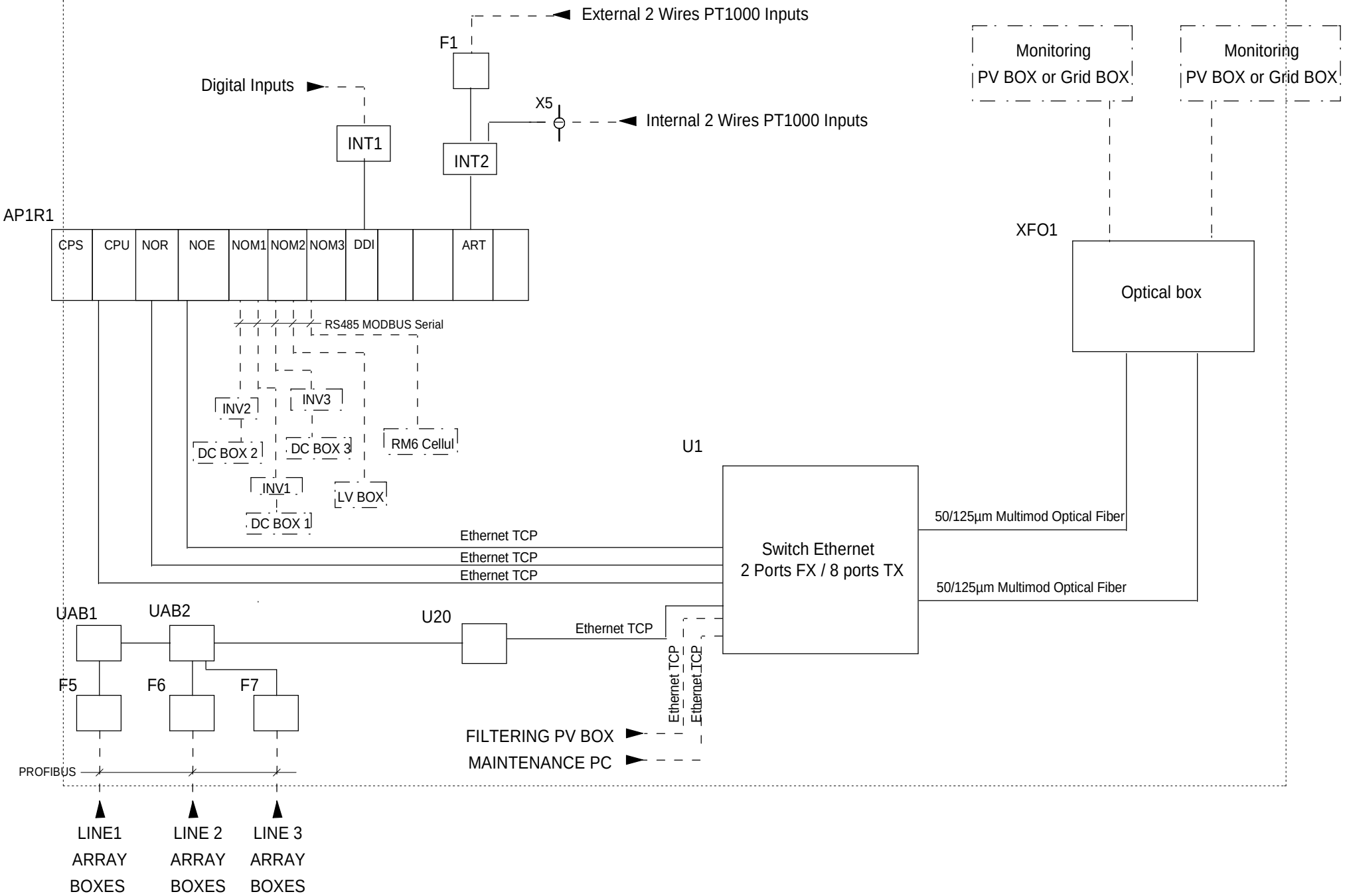

The technical information contained in this document is the exclusive property of Schneider Electric Industries S.A.S and cannot be used or disclosed to third parties of any kind without its written consent. Only those drawings and diagrams marked "for issue" are released for execution. All drawings or extracts are to be used only when they are in open position, drawn out with operating mechanism discharged and all power sources off.

Les informations techniques contenues dans ce document sont la propriete exclusive de Schneider Electric Industries S.A.S et ne peuvent etre utilisees ou divulguees a des tiers quels qu'ils soient sans son accord ecrit. Seuls nous engagent les dessins et schemas marqués "pour emission" et ceux qui sont ecrits. Les dessins et schemas ne sont valables sur ce schéma sont en position ouvert - désarmés - débrochés - toutes sources coupées.

Ind. Rev	Date Date		Archiv. Micro-filmed	Ind. Rev	Date Date	Modification / Modification	Archiv. Micro-filmed
00	18/12/2013	Edition originale / First issue					

MONITORING DIAGRAMM

PV MONITORING CONTROL CABINET
(PV MCC)
ADVANCED HD
BASE

Validated for Pilot run
Printed on 2014/01/10

Schneider Electric

EAV5821701

Projet - No commande
Project - Order No.

Indice Rev 00

Folio Sheet 014

A3 suite - 01/2008

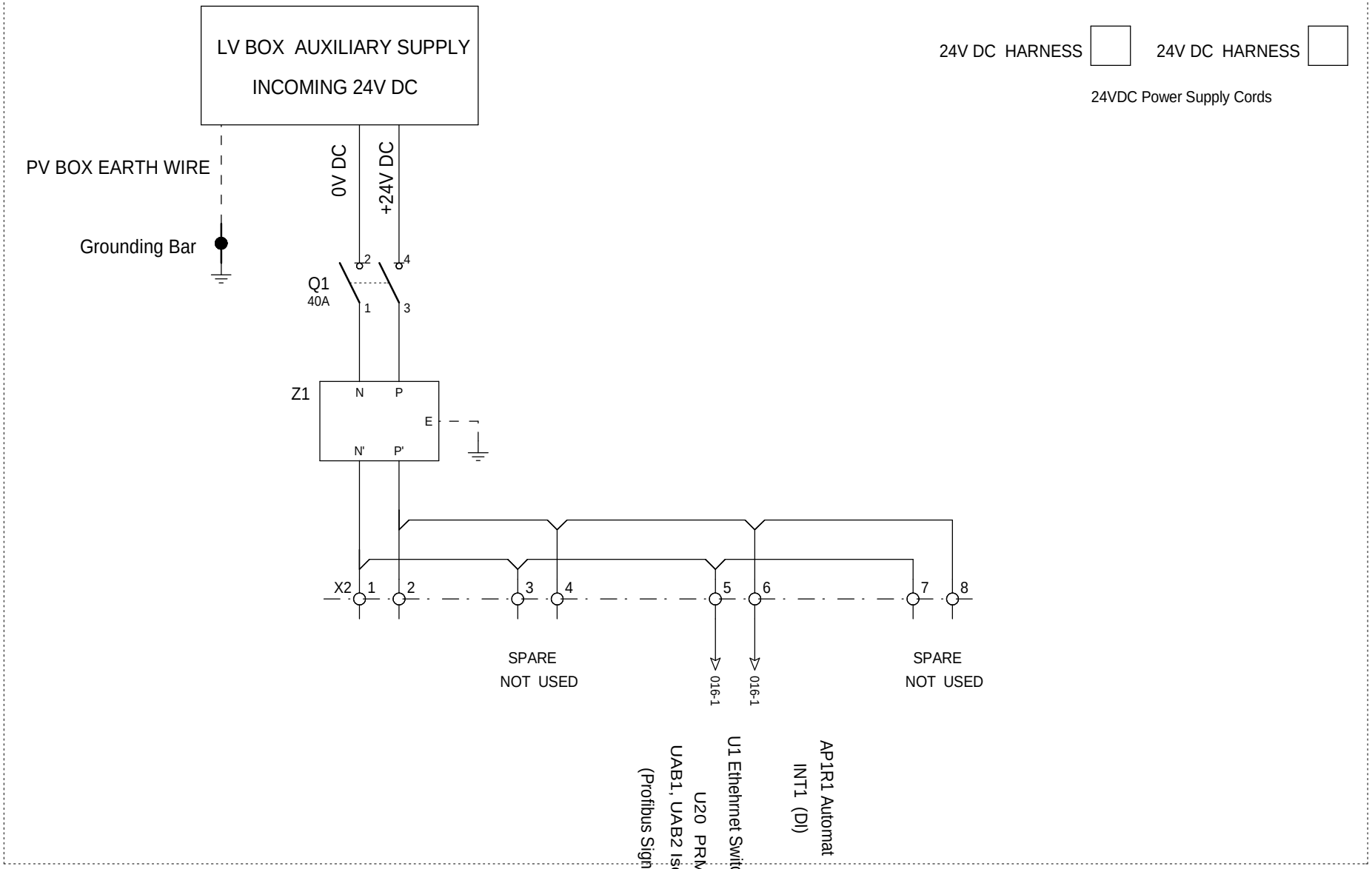

=
+MCC

The technical information contained in this document is the exclusive property of Schneider Electric Industries S.A.S and cannot be used or disclosed to third parties of any kind without its written consent. Only those drawings and diagrams marked "Validated" are authorized for use with the equipment described in this document. All power sources are in open position, drawn out with operating mechanism discharged and all power sources off.

Les informations techniques contenues dans ce document sont la propriete exclusive de Schneider Electric Industries S.A.S et ne peuvent etre utilisees ou divulguees a des tiers quels qu'ils soient sans son accord ecrit. Seuls nous engageant sur ce schéma sont en position ouvert - désarmés - débrochés - toutes sources coupées.

Ind. Rev	Date Date		Archiv. Micro-filmed	Ind. Rev	Date Date	Modification / Modification	Archiv. Micro-filmed
00	18/12/2013	Edition originale / First issue					

+24VDC POWER SUPPLY DISTRIBUTION

PV MONITORING CONTROL CABINET
(PV MCC)
ADVANCED HD
BASE

Validated for Pilot Run
Printed on 2014/01/10

Schneider Electric

EAV5821701

Projet - No commande
Project - Order No.

Indice Rev 00

Folio Sheet 015

A3 suite - 01/2008

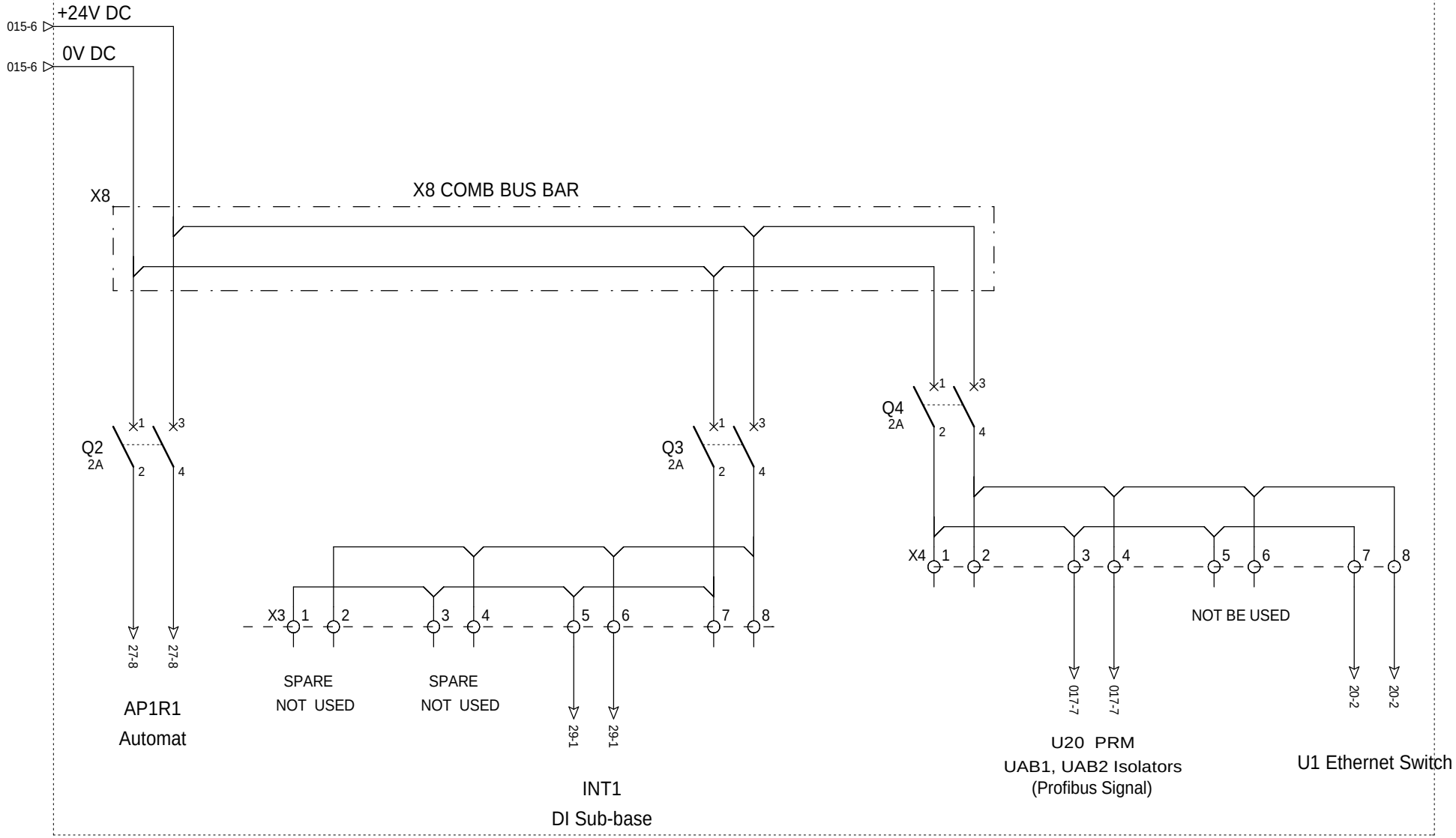

=
+MCC

The technical information contained in this document is the exclusive property of Schneider Electric Industries S.A.S and cannot be used or disclosed to third parties of any kind without its written consent. Only those drawings and diagrams marked "Validated for Pilot Run" are to be used for execution. All devices shown in the diagrams are in open position, drawn out with operating mechanism discharged and all power sources off.

Les informations techniques contenues dans ce document sont la propriete exclusive de Schneider Electric Industries S.A.S et ne peuvent etre utilisees ou divulguees a des tiers quels qu'ils soient sans son accord ecrit. Seuls nous engageant sur ce schéma sont en position ouvert - désarmés - débrochés - toutes sources coupées.

Ind. Rev	Date Date	Modification / Modification	Archiv. Micro-filmed	Ind. Rev	Date Date	Modification / Modification	Archiv. Micro-filmed
00	18/12/2013	Edition originale / First issue					

+24V DC POWER SUPPLY DISTRIBUTION

PV MONITORING CONTROL CABINET
(PV MCC)
ADVANCED HD
BASE

Validated for Pilot Run
Printed on 2014/01/10

Schneider Electric

EAV5821701

Projet - No commande
Project - Order No.

Indice Rev 00

Folio Sheet 016

A3 suite - 01/2008

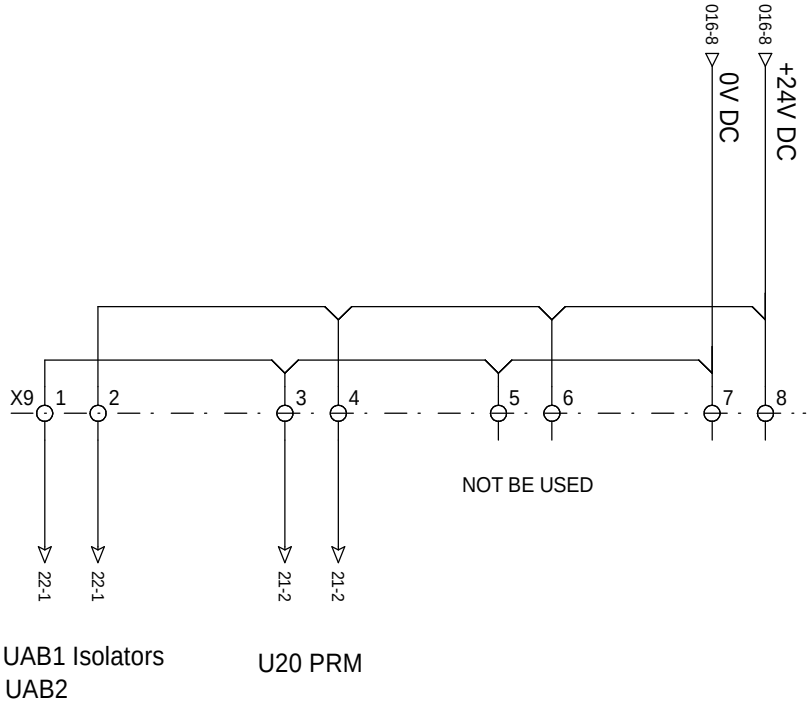

+MCC

The technical information contained in this document is the exclusive property of Schneider Electric Industries S.A.S and cannot be used or disclosed to third parties of any kind without its written consent. Only those drawings and diagrams marked "certified" or "for approval" are valid for execution. All drawings shown in this document are in open position, drawn out with operating mechanism discharged and all power sources off.

Les informations techniques contenues dans ce document sont la propriete exclusive de Schneider Electric Industries S.A.S et ne peuvent etre utilisees ou divulguees a des tiers quels qu'ils soient sans son accord ecrit. Seuls nous engageant sur ce document les plans et schemas marques "certifie" ou "pour approbation". Les schemas ci-joints sont en position ouvert - désarmés - débrochés - toutes sources coupées.

Rev.	Date	Modification	Archiv. Micro-filmed	Rev.	Date	Modification	Archiv. Micro-filmed
00	18/12/2013	Edition originale					

+24V DC POWER SUPPLY DISTRIBUTION FOR PROFIBUS CONNECTION

PV MONITORING CONTROL CABINET (PV MCC) ADVANCED HD BASE

Validated for Pilot Run Printed on 2014/01/10

Schneider Electric

EAV5821701

Projet - Nom du Projet | Ordre de Commande | Indice | Feuille
00 | 017

A3 E=mc² 05/2008

The technical information contained in this document is the exclusive property of Schneider Electric Industries S.A.S and cannot be used or disclosed to third parties of any kind without its written consent. Only those drawings and diagrams marked "certified" are to be used for execution. All drawings shown in this document are in open position, drawn out with operating mechanism discharged and all power sources off.

Les informations techniques contenues dans ce document sont la propriete exclusive de Schneider Electric Industries S.A.S et ne peuvent etre utilisees ou divulguees a des tiers quels qu'ils soient sans son accord ecrit. Seuls nous engageant sur ce schéma sont les plans et schéma dans une position ouverte - désarmés - débrochés - toutes sources coupées, les autres documents, la connaissance de l'appareil ne représentés sur ce schéma sont en position ouverte - désarmés - débrochés - toutes sources coupées.

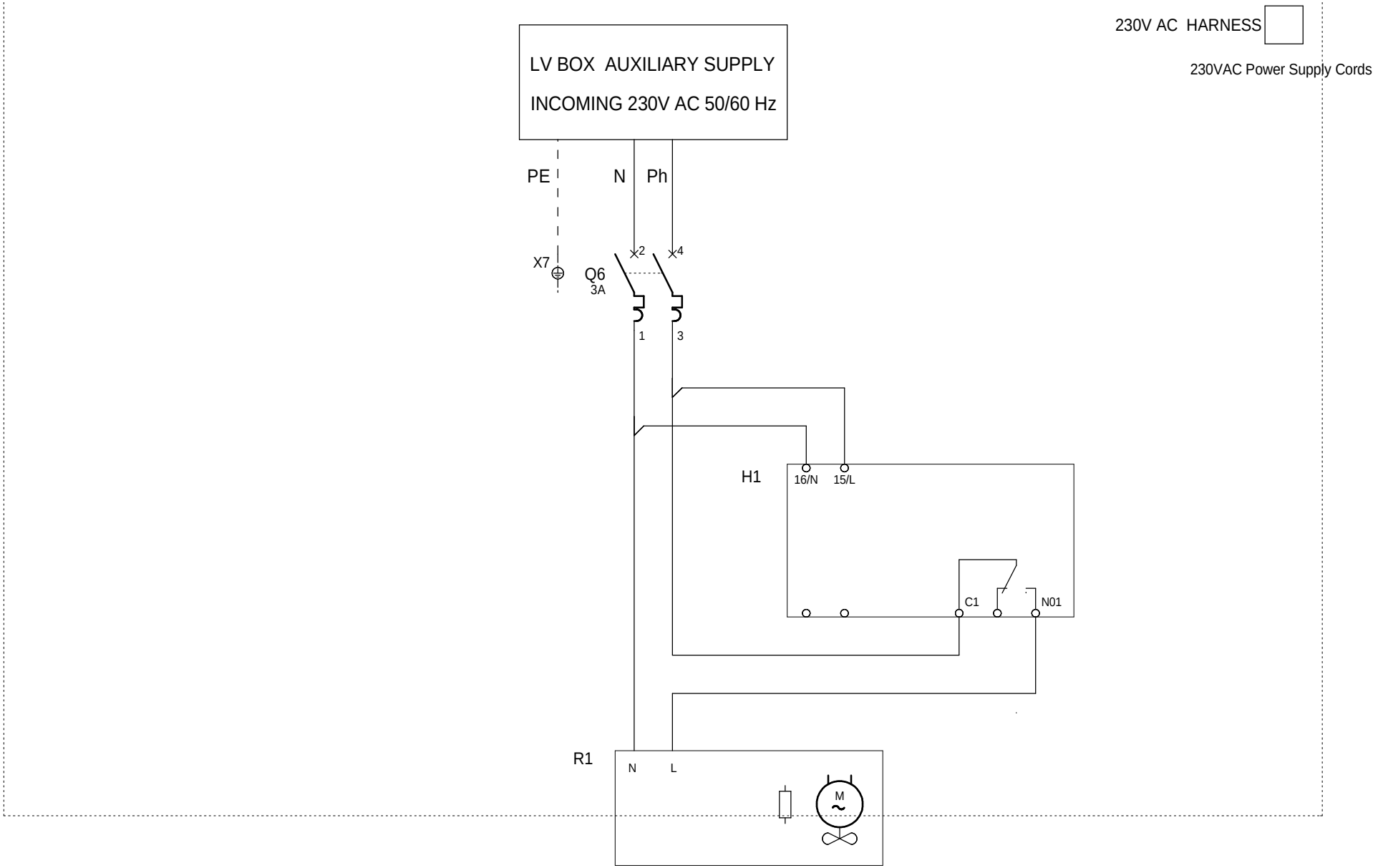

=
+MCC

Ind. Rev	Date Date	Modification / Modification	Archiv. Micro-filmed	Ind. Rev	Date Date	Modification / Modification	Archiv. Micro-filmed
00	18/12/2013	Edition originale / First issue					

230V AC POWER SUPPLY HEATER

PV MONITORING CONTROL CABINET
(PV MCC)
ADVANCED HD
BASE

Validated for Pilot run
Printed on 2014/01/10

Schneider Electric

EAV5821701

Projet - No commande
Project - Order No.

Indice Rev 00

Folio Sheet 18

A3 suite - 01/2008

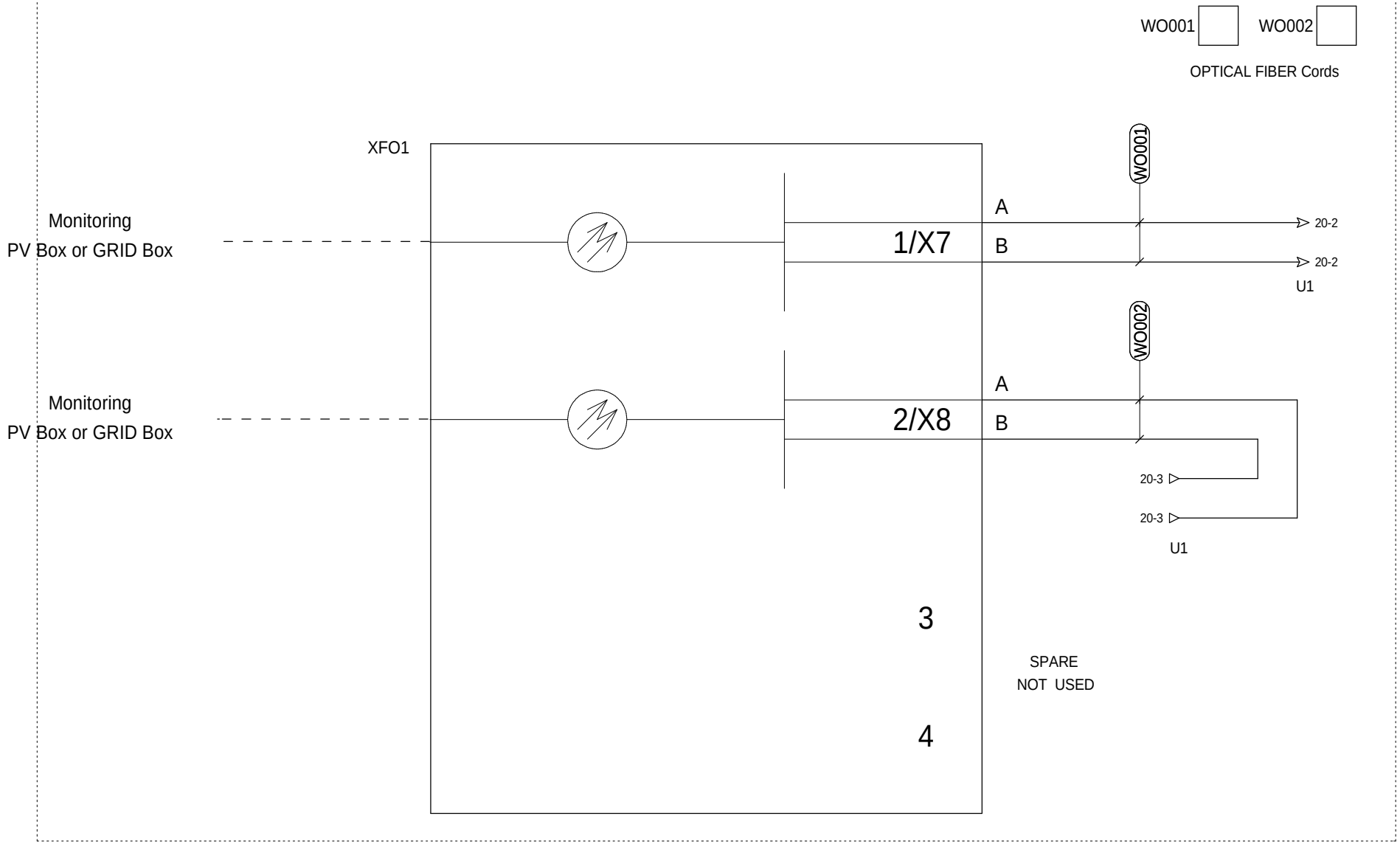

=
+MCC

The technical information contained in this document is the exclusive property of Schneider Electric Industries S.A.S and cannot be used or disclosed to third parties of any kind without its written consent. Only those drawings and diagrams marked "for Pilot Run" are valid for execution. All other drawings are in open position, drawn out with operating mechanism discharged and all power sources off.

Les informations techniques contenues dans ce document sont la propriete exclusive de Schneider Electric Industries S.A.S et ne peuvent etre utilisees ou divulguees a des tiers quels qu'ils soient sans son accord ecrit. Seuls nous engagent ce qui est indiqué sur les plans et schémas marqués « pour mise en service ». Les autres documents, les schémas non marqués sur ce schéma sont en position ouvert - désarmés - débrochés - toutes sources coupées.

Ind. Rev	Date Date	Modification / Modification	Archiv. Micro-filmed	Ind. Rev	Date Date	Modification / Modification	Archiv. Micro-filmed
00	18/12/2013	Edition originale / First issue					

OPTICAL BOX

PV MONITORING CONTROL CABINET
(PV MCC)
ADVANCED HD
BASE

Validated for Pilot Run
Printed on 2014/01/10

Schneider Electric

EAV5821701

Projet - No commande
Project - Order No.

Indice Rev 00

Folio Sheet 19

A3 suite - 01/2008

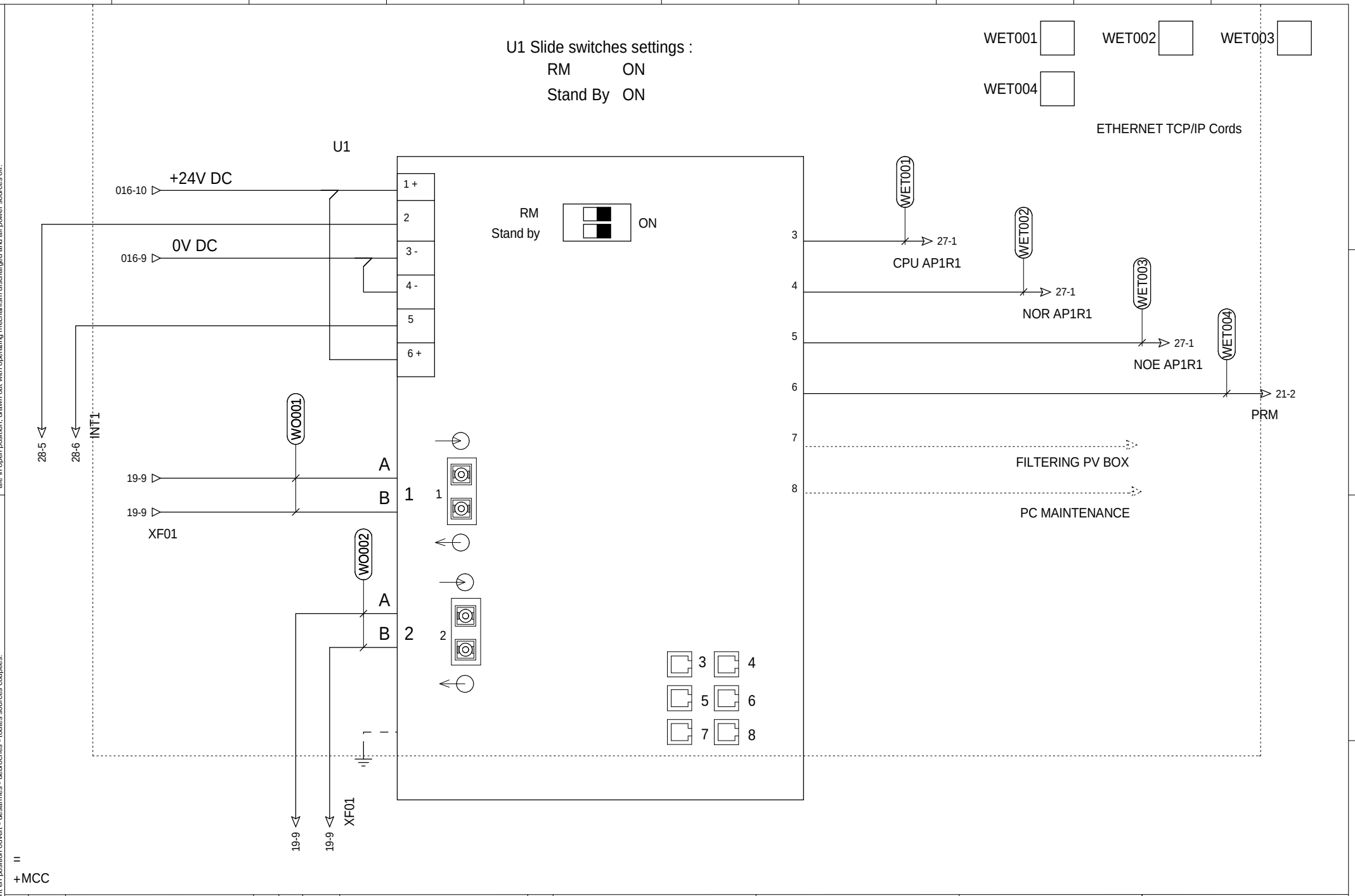

The technical information contained in this document is the exclusive property of Schneider Electric Industries S.A.S and cannot be used or disclosed to third parties of any kind without its written consent. Only those drawings and diagrams marked "Validated for Pilot Run" are to be used for execution purposes, provided that they are in open position, drawn out with operating mechanism discharged and all power sources off.

Les informations techniques contenues dans ce document sont la propriete exclusive de Schneider Electric Industries S.A.S et ne peuvent etre utilisees ou divulguees a des tiers quels qu'ils soient sans son accord ecrit. Seuls nous engagent les plans et schemas marqués "Valide pour mise en service", dans une position ouverte, mécanisme de commande déchargé et toutes sources coupées, sur ce schéma sont en position ouvert - désarmés - débrochés - toutes sources coupées.

Ind. Rev	Date Date		Archiv. Micro-filmed	Ind. Rev	Date Date	Modification / Modification	Archiv. Micro-filmed
00	18/12/2013	Edition originale / First issue					

ETHERNET TCP/IP SWITCH

PV MONITORING CONTROL CABINET (PV MCC) ADVANCED HD BASE

Validated for Pilot Run
Printed on 2014/01/10

Schneider Electric

EAV5821701

Projet - No commande Project - Order No.	Indice Rev	Folio Sheet
	00	20

A3 suite - 01/2008

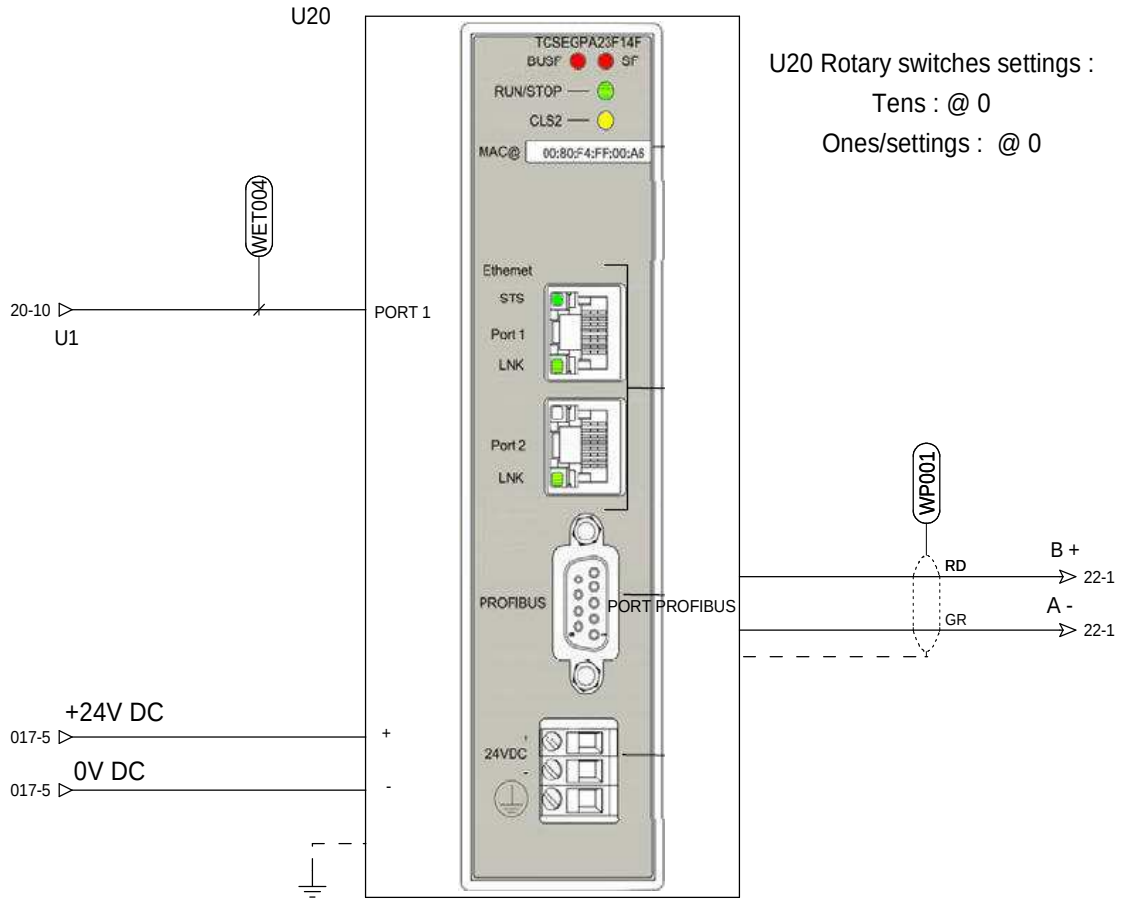

U20 Rotary switches settings :

Tens : @ 0

Ones/settings : @ 0

WP001

PROFIBUS Cord

D-SUB connector slide switch settings : ON
(termination resistor connected)

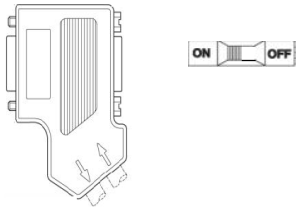

DETAILS of END WP001 CORD (U20 side)

D-SUB connector slide switch settings : OFF
(termination resistor disconnected)

DETAILS of END WP001 CORD (UAB1 side)

=
+MCC

The technical information contained in this document is the exclusive property of Schneider Electric Industries S.A.S and cannot be used or disclosed to third parties of any kind without its written consent. Only those drawings and diagrams marked "certified" or "approved" are valid for execution. All drawings shown in this document are in open position, drawn out with operating mechanism discharged and all power sources off.

Les informations techniques contenues dans ce document sont la propriete exclusive de Schneider Electric Industries S.A.S et ne peuvent etre utilisees ou divulguees a des tiers quels qu'ils soient sans son accord ecrit. Seuls nous engageant sur ce schéma sont en position ouvert - désarmés - débrochés - toutes sources coupées.

Ind. Rev	Date Date	Modification / Modification	Archiv. Micro-filmed	Ind. Rev	Date Date	Modification / Modification	Archiv. Micro-filmed
00	18/12/2013	Edition originale / First issue					

PROFIBUS REMOTE MASTER

PV MONITORING CONTROL CABINET
(PV MCC)
ADVANCED HD
BASE

Validated for Pilot Run
Printed on 2014/01/10

Schneider Electric

EAV5821701

Projet - No commande
Project - Order No.

Indice Rev 00

Folio Sheet 21

A3 suite - 01/2008

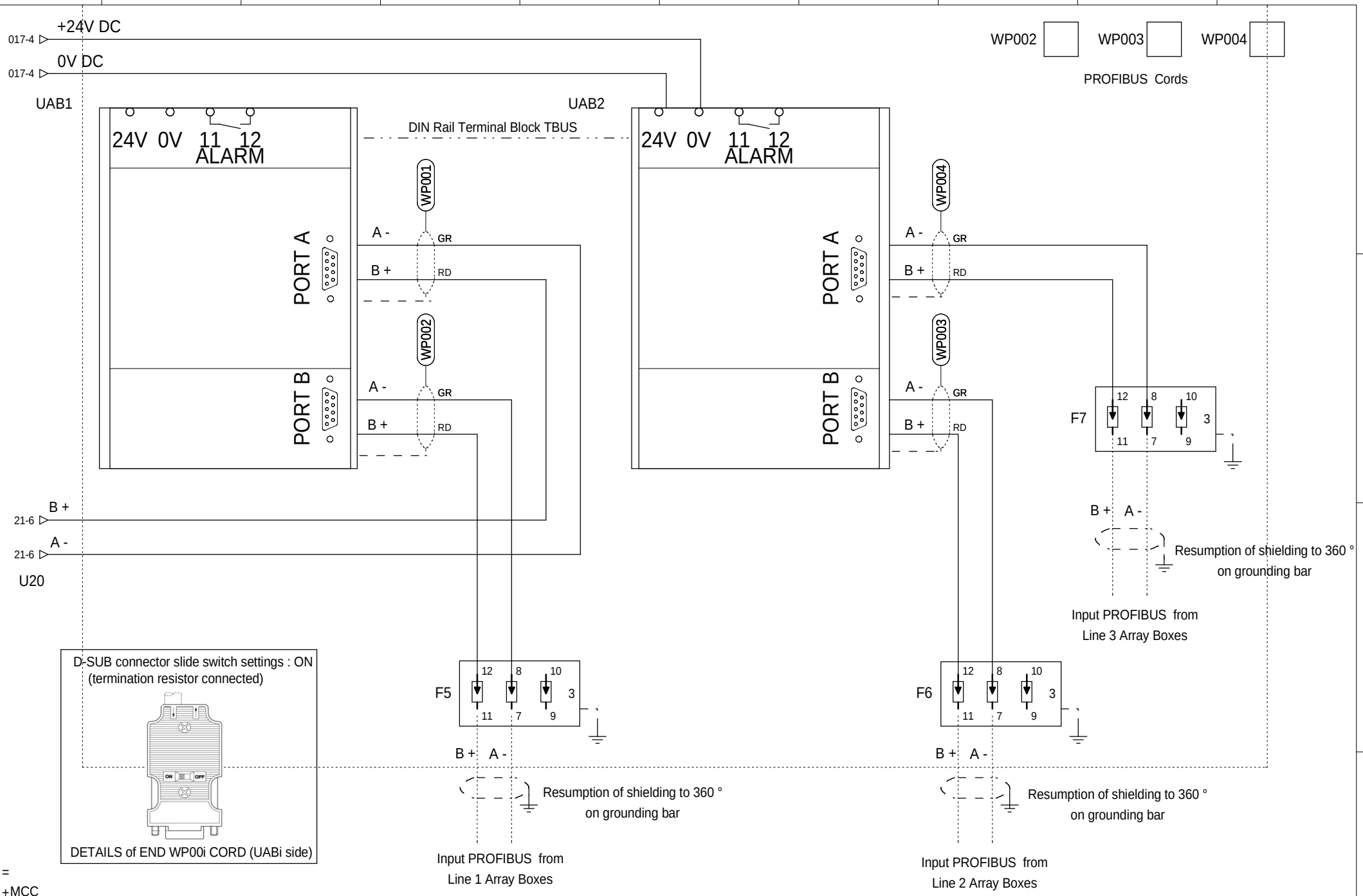

The technical information contained in this document is the exclusive property of Schneider Electric Industries S.A.S and cannot be used or disclosed to third parties of any kind without its written consent. Only those drawings and diagrams marked "for Pilot Run" are in force. All other drawings are in force when the voltages are in open position, drawn out with operating mechanism discharged and all power sources off.

Les informations techniques contenues dans ce document sont la propriete exclusive de Schneider Electric Industries S.A.S et ne peuvent etre utilisees ou divulguees a des tiers quels qu'ils soient sans son accord ecrit. Seuls nous engageant sont les dessins marques "pour Mise en Service". Les autres dessins ne sont valables que lorsque les appareils representes sur ce schéma sont en position ouvert - désarmés - débrochés - toutes sources coupées.

Ind. Rev	Date Date		Archiv. Micro-filmed	Ind. Rev	Date Date	Modification / Modification	Archiv. Micro-filmed
00	18/12/2013	Edition originale / First issue					

PROFIBUS GATEWAY

PV MONITORING CONTROL CABINET
(PV MCC)
ADVANCED HD
BASE

Validated for Pilot Run
Printed on 2014/01/10

Schneider Electric

EAV5821701

Projet - No commande / Project - Order No.	Indice Rev	Folio Sheet
	00	22

A3 suite - 01/2008

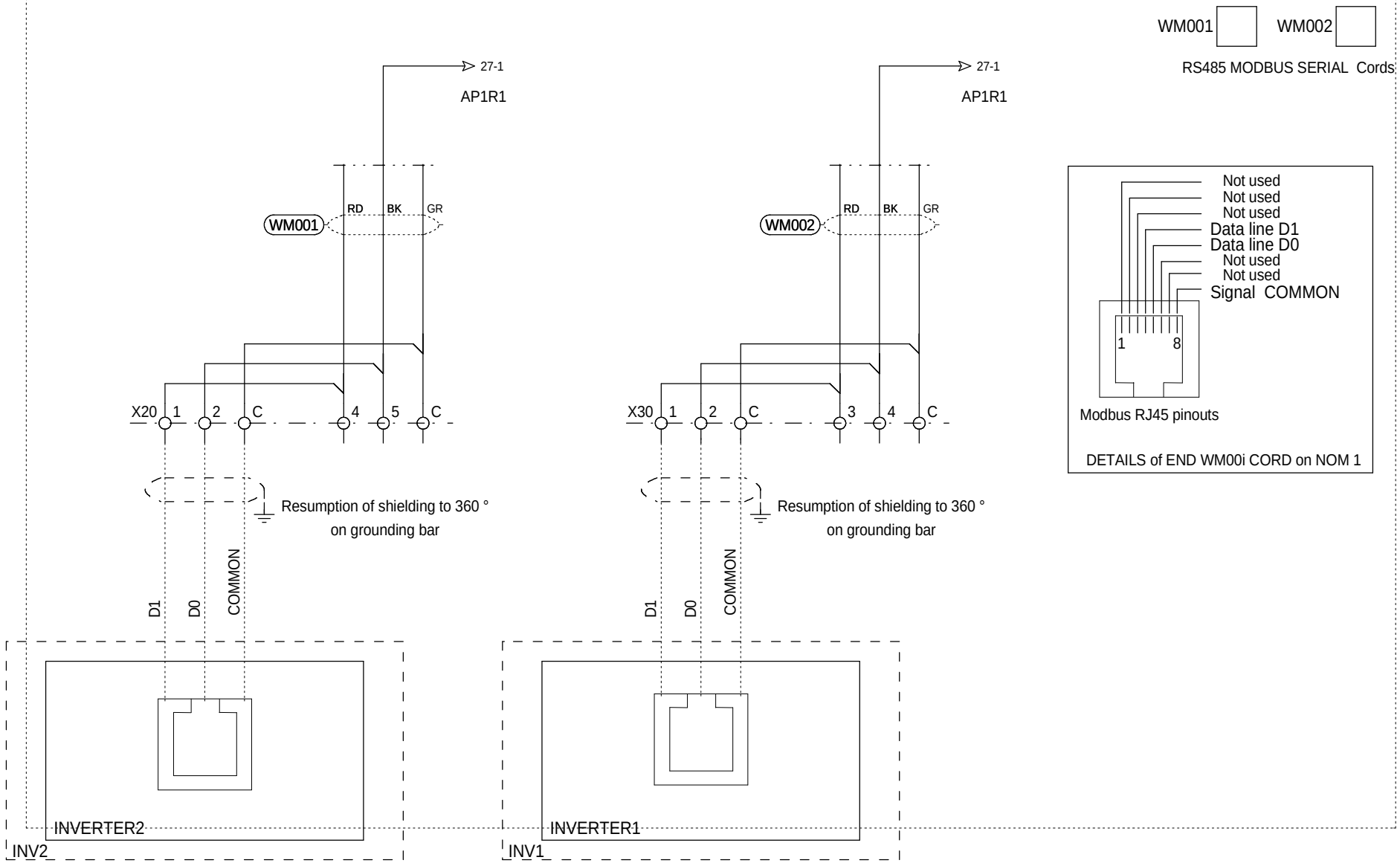

RS485 MODBUS SERIAL INVERTER2
connected to DC BOX 2 by DAISY CHAIN

RS485 MODBUS SERIAL INVERTER1
connected to DC BOX 1 by DAISY CHAIN

=
+MCC

The technical information contained in this document is the exclusive property of Schneider Electric Industries S.A.S and cannot be used or disclosed to third parties of any kind without its written consent. Only those drawings and diagrams marked "for execution" or "for approval" are to be used for the execution of the work. All drawings shown in this document are in open position, drawn out with operating mechanism discharged and all power sources off.

Les informations techniques contenues dans ce document sont la propriete exclusive de Schneider Electric Industries S.A.S et ne peuvent etre utilisees ou divulguees a des tiers quels qu'ils soient sans son accord ecrit. Seuls nous engageant sur ce schéma sont en position ouvert - désarmés - débrochés - toutes sources coupées.

Ind. Rev	Date Date		Archiv. Micro-filmed	Ind. Rev	Date Date	Modification / Modification	Archiv. Micro-filmed
00	18/12/2013	Edition originale / First issue					

INVERTER 1 AND 2 MODBUS CONNECTION

PV MONITORING CONTROL CABINET
(PV MCC)
ADVANCED HD
BASE

Validated for Pilot run
Printed on 2014/01/10

Schneider Electric

EAV5821701

Projet - No commande
Project - Order No.

Indice Rev 00

Folio Sheet 23

A3 suite - 01/2008

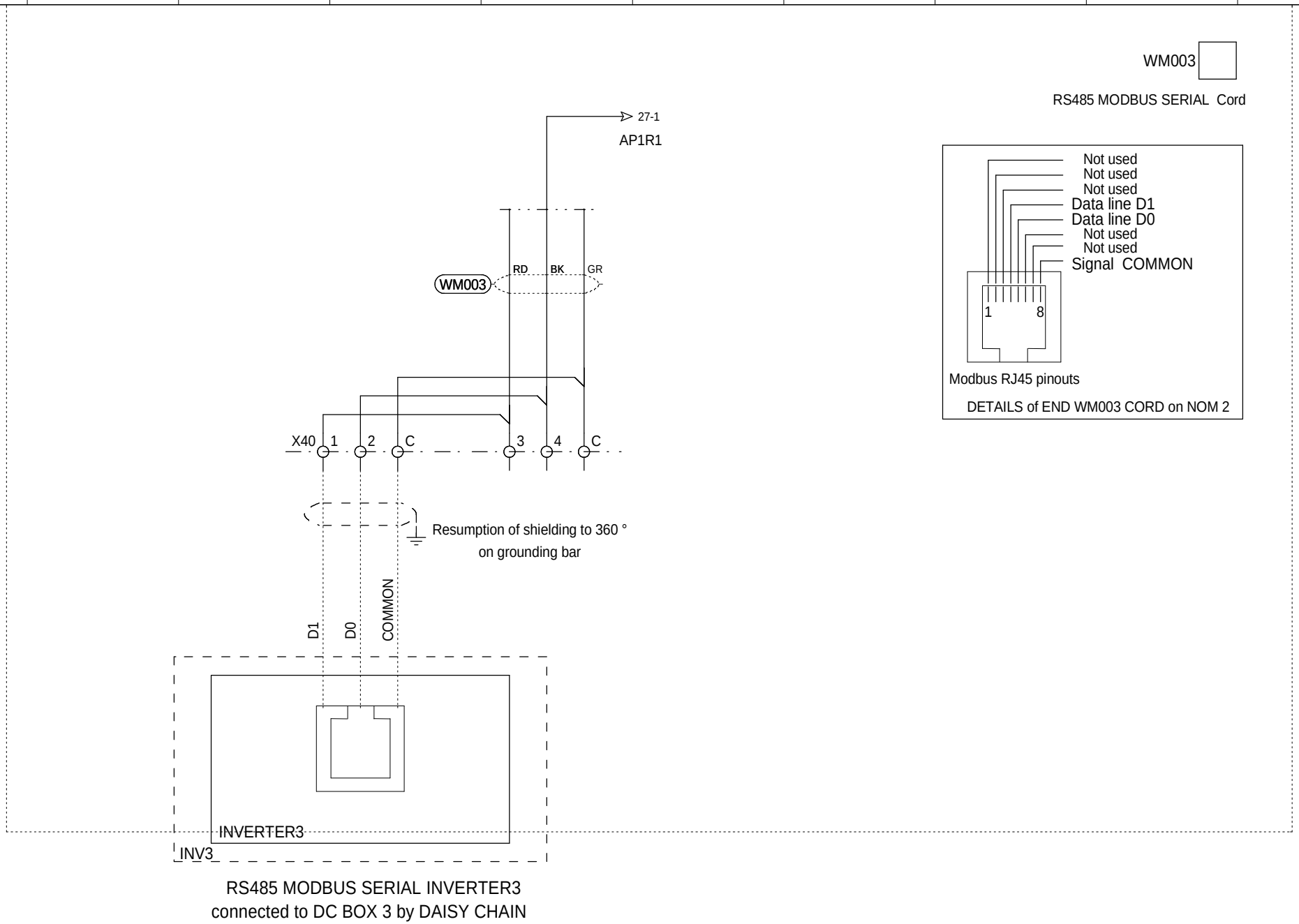

RS485 MODBUS SERIAL INVERTER3
connected to DC BOX 3 by DAISY CHAIN

+MCC

The technical information contained in this document is the exclusive property of Schneider Electric Industries S.A.S and cannot be used or disclosed to third parties of any kind without its written consent. Only those drawings and diagrams marked "certified" are valid for execution and all drawings shown in this document are in open position, drawn out with operating mechanism discharged and all power sources off.

Les informations techniques contenues dans ce document sont la propriete exclusive de Schneider Electric Industries S.A.S et ne peuvent etre utilisees ou divulguees a des tiers quels qu'ils soient sans son accord ecrit. Seuls nous engageant sur ce document, les plans et schemas marques "certifie" lorsque ils sont executes. Les appareils representes sur ce schéma sont en position ouvert - désarmés - débrochés - toutes sources coupées.

Rev.	Date	Modification	Archiv. Micro-filmed	Rev.	Date	Modification	Archiv. Micro-filmed
00	18/12/2013	Edition originale					

INVERTER 3 MODBUS CONNECTION

PV MONITORING CONTROL CABINET
(PV MCC)
ADVANCED HD
BASE

Validated for Pilot Run
Printed on 2014/01/10

Schneider Electric

EAV5821701

Projet - Nom du Projet | Ordre de Commande | Indice Rev. 00 | Feuille Sheet 24

A3 E=mc² 05/2008

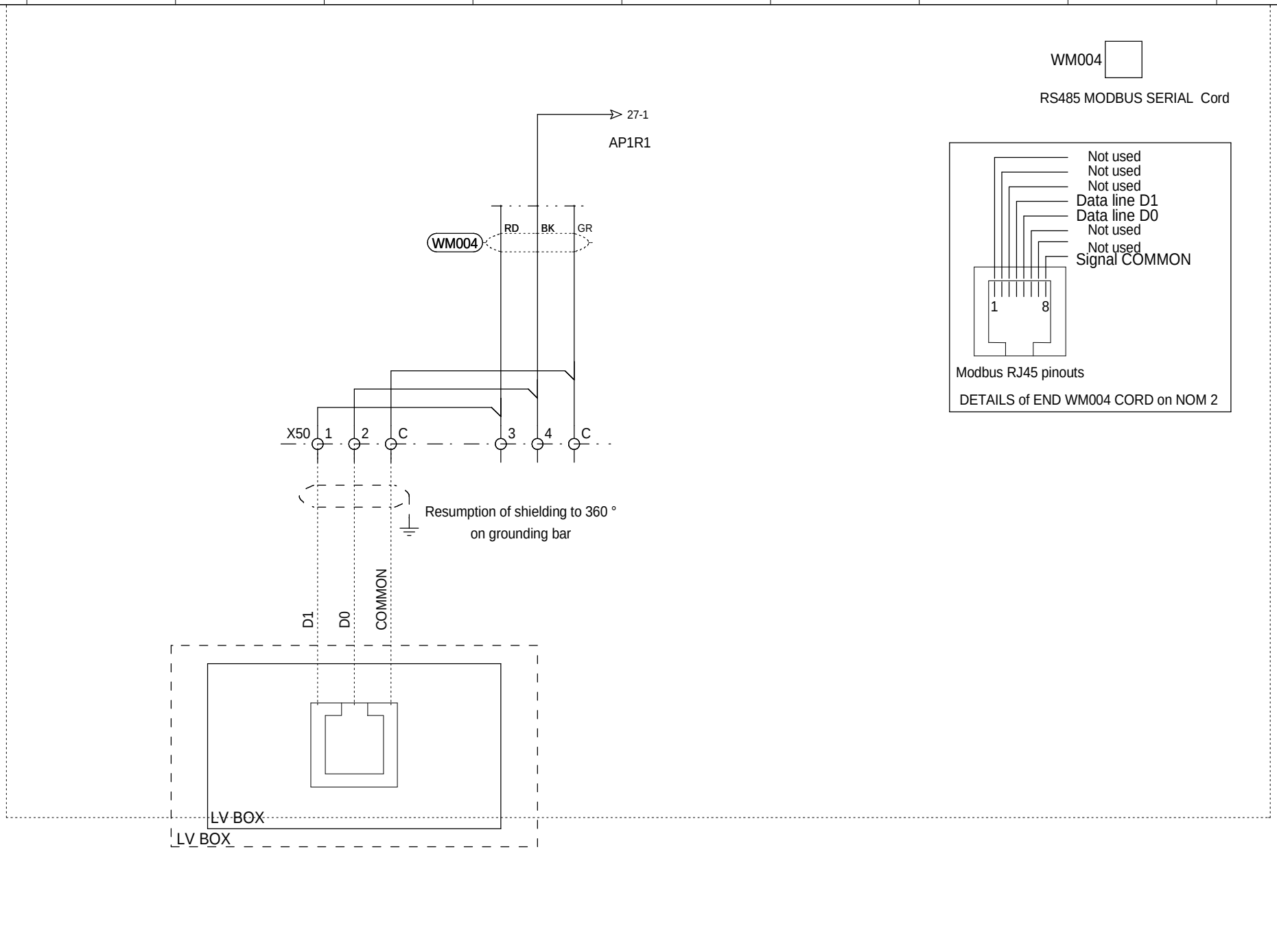

=
+MCC

The technical information contained in this document is the exclusive property of Schneider Electric Industries S.A.S and cannot be used or disclosed to third parties of any kind without its written consent. Only those drawings and diagrams marked "certified" are to be used for execution. All drawings shown in this document are in open position, drawn out with operating mechanism discharged and all power sources off.

Les informations techniques contenues dans ce document sont la propriete exclusive de Schneider Electric Industries S.A.S et ne peuvent etre utilisees ou divulguees a des tiers quels qu'ils soient sans son accord ecrit. Seuls nous engageant sur ce schéma sont les plans et schemas marqués "certifié" lorsque l'appareillage est en position ouvert - désarmés - débrochés - toutes sources coupées.

Rev.	Date	Modification	Archiv. Micro-filmed	Rev.	Date	Modification	Archiv. Micro-filmed
00	18/12/2013	Edition originale					

LV BOX MODBUS CONNECTION

PV MONITORING CONTROL CABINET
(PV MCC)
ADVANCED HD
BASE

Validated for Pilot Run
Printed on 2014/01/10

Schneider Electric

EAV5821701

Projet - Nom du Projet
Commande - Order No.
Indice - Rev.
00
Feuille - Sheet
25

A3 E=mc² 05/2008

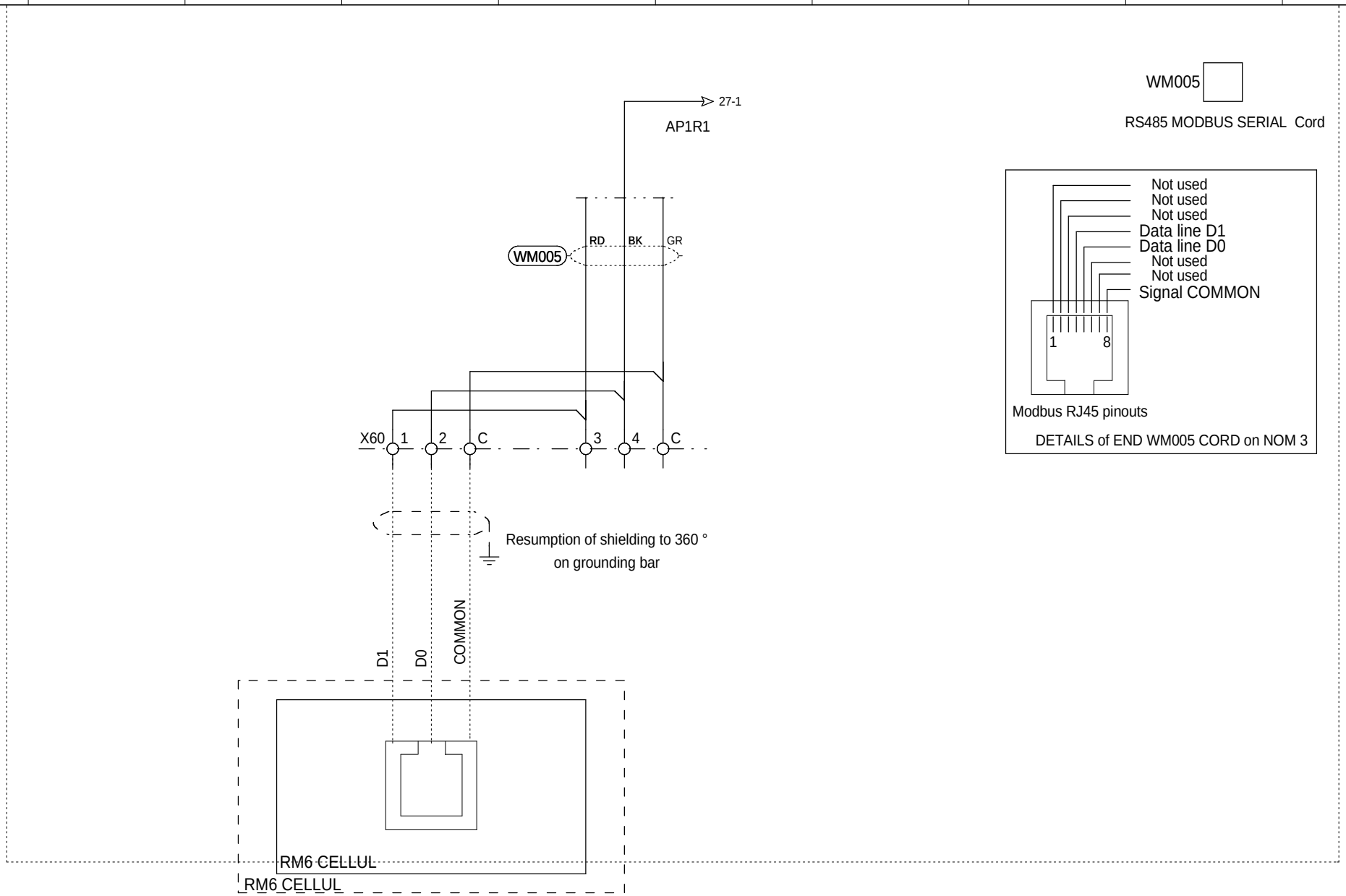

+MCC

The technical information contained in this document is the exclusive property of Schneider Electric Industries S.A.S and cannot be used or disclosed to third parties of any kind without its written consent. Only those drawings and diagrams marked "certified" are to be used for execution and installation purposes. All drawings shown in this document are in open position, drawn out with operating mechanism discharged and all power sources off.

Les informations techniques contenues dans ce document sont la propriete exclusive de Schneider Electric Industries S.A.S et ne peuvent etre utilisees ou divulguees a des tiers quels qu'ils soient sans son accord ecrit. Seuls nous engagent les dessins marqués "certifiés" utilisés à des fins d'execution et d'installation. Tous les dessins ci-dessus sont en position ouvert - désarmés - débrochés - toutes sources coupées.

Rev.	Date	Modification	Archiv. Micro-filmed	Rev.	Date	Modification	Archiv. Micro-filmed
00	18/12/2013	Edition originale					

RM6 CELLUL MODBUS CONNECTION

PV MONITORING CONTROL CABINET
(PV MCC)
ADVANCED HD
BASE

Validated for Pilot Run
Printed on 2014/01/10

Schneider Electric

EAV5821701

Projet - Nom du Projet | Ordre de Commande | Indice Rev. 00 | Feuille Sheet 26

A3 E=mc² 05/2008

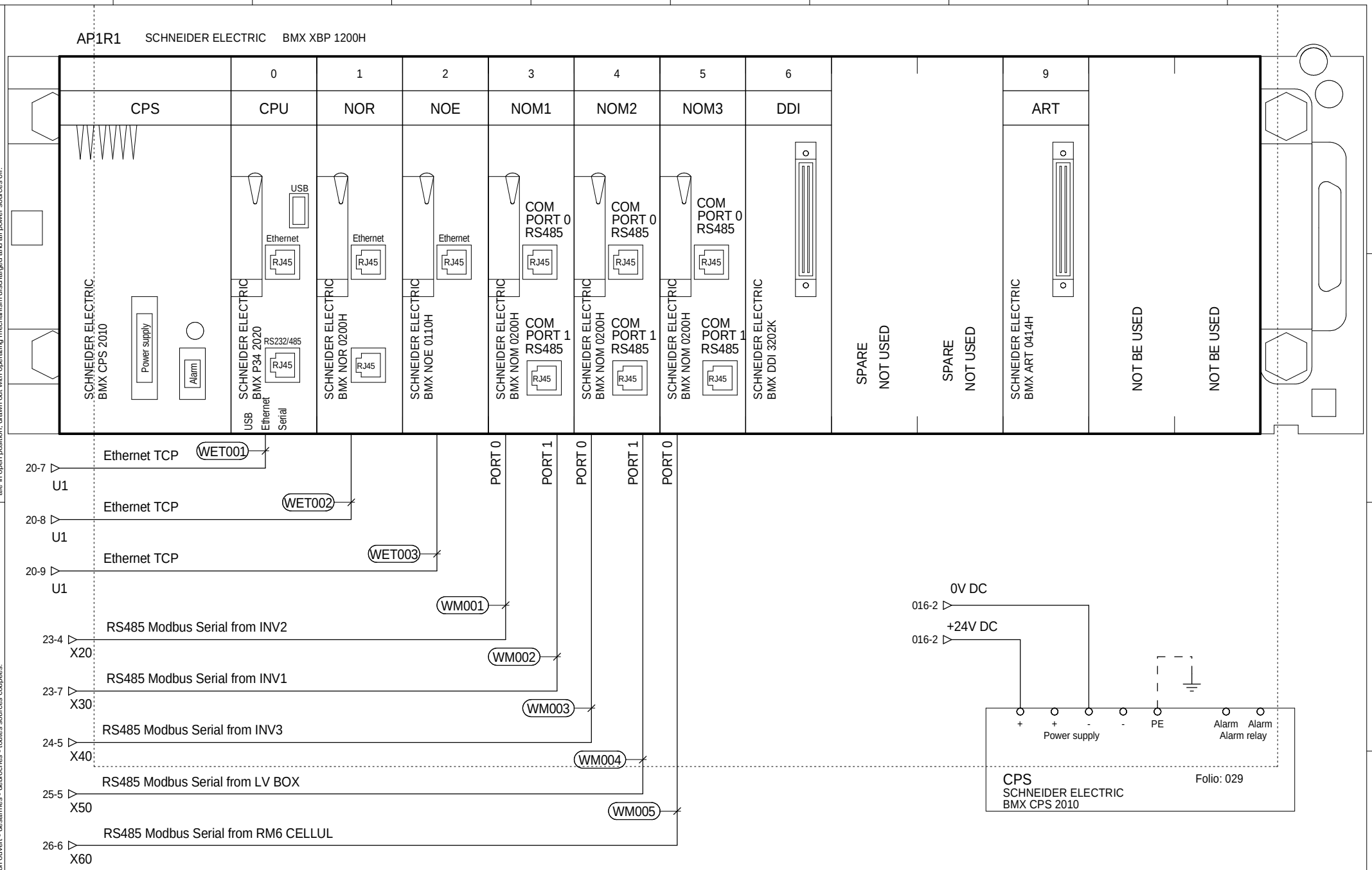

The technical information contained in this document is the exclusive property of Schneider Electric Industries S.A.S and cannot be used or disclosed to third parties of any kind without its written consent. Only those drawings and diagrams marked "for approval" or "for execution" are to be used for execution. All devices shown in the diagrams are in open position, drawn out with operating mechanism discharged and all power sources off.

Les informations techniques contenues dans ce document sont la propriete exclusive de Schneider Electric Industries S.A.S et ne peuvent etre utilisees ou divulguees a des tiers quels qu'ils soient sans son accord ecrit. Seuls nous engagent ceux marques "pour approbation" ou "pour execution". Les appareils representes sur ce schéma sont en position ouvert - désarmés - débrochés - toutes sources coupées.

Ind. Rev	Date Date		Archiv. Micro-filmed	Ind. Rev	Date Date	Modification / Modification	Archiv. Micro-filmed
00	18/12/2013	Edition originale / First issue					

M340 AUTOMAT RACK

PV MONITORING CONTROL CABINET
(PV MCC)
ADVANCED HD
BASE

Validated for Pilot run
Printed on 2014/01/10

Schneider Electric

EAV5821701

Projet - No commande
Project - Order No.

Indice Rev 00

Folio Sheet 27

A3 suite - 11/2006

LV BOX CB Non-priority Closed	LV BOX CB Priority Closed	LV BOX Climatic Pack Closed	MONITORING BOX Switch Ethernet OK	TRANSFORMER DMCR Protection relay alarm	TRANSFORMER DMCR Tripping	RMU - Incomer SW Close	RMU - Feeder Watchdog status OK

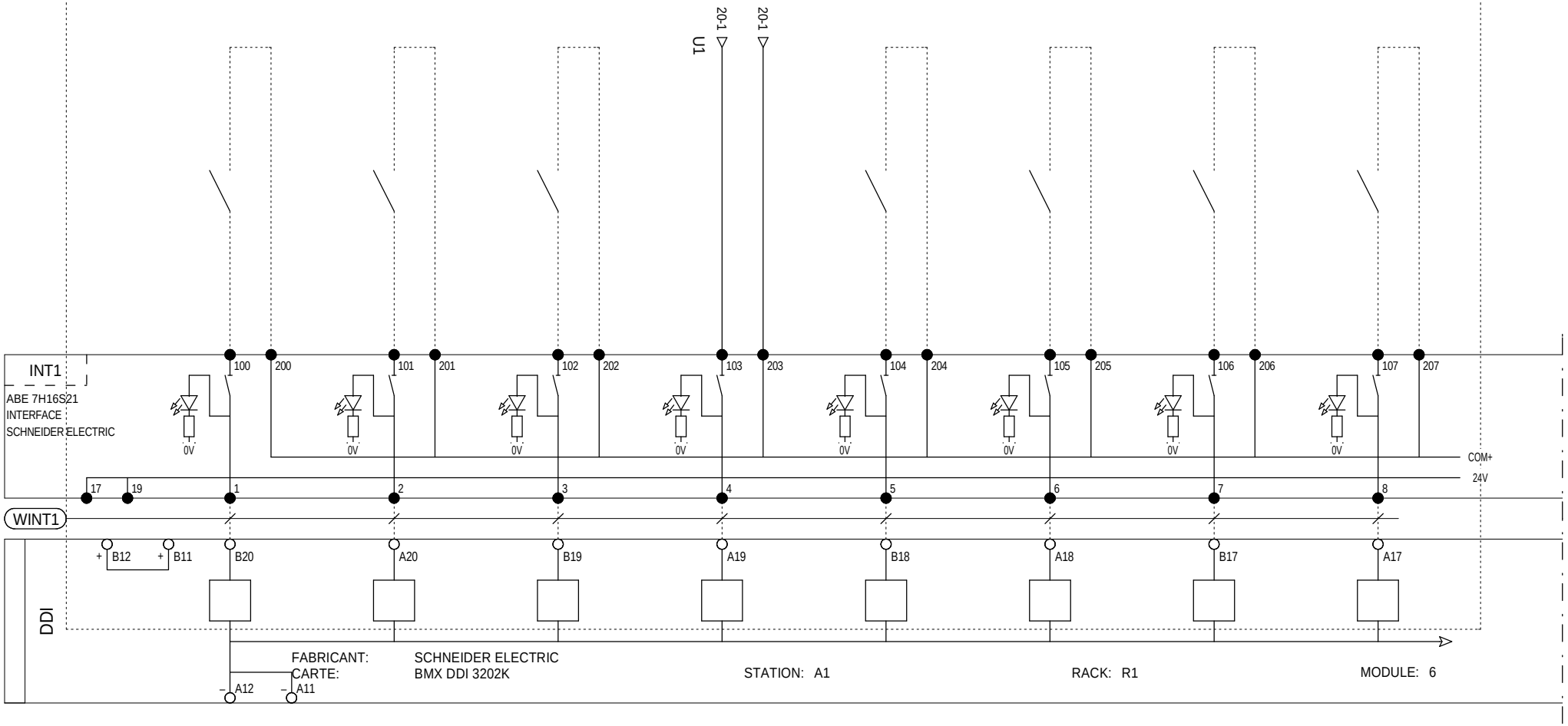

MCC

The technical information contained in this document is the exclusive property of Schneider Electric Industries S.A.S and cannot be used or disclosed to third parties of any kind without its written consent. Only those drawings and diagrams marked "for execution" are to be used for execution. All devices shown in the diagrams are in open position, drawn out with operating mechanism discharged and all power sources off.

Les informations techniques contenues dans ce document sont la propriete exclusive de Schneider Electric Industries S.A.S et ne peuvent etre utilisees ou divulguees a des tiers quels qu'ils soient sans son accord ecrit. Seuls nous engagent ceux marques "pour execution". Les appareils representes sur ce schéma sont en position ouvert - désarmés - débrochés - toutes sources coupées.

Ind. Rev	Date Date		Archiv. Micro-filmed	Ind. Rev	Date Date	Modification / Modification	Archiv. Micro-filmed
00	18/12/2013	Edition originale / First issue					

ADVANCED HD Digital Inputs

PV MONITORING CONTROL CABINET
(PV MCC)
ADVANCED HD
BASE

Validated for Pilot Run
Printed on 2014/01/10

Schneider Electric

EAV5821701

Projet - No commande
Project - Order No.

Indice Rev 00

Folio Sheet 28

A3 suite - 11/2006

RMU Feeder CB Close	RMU Feeder Local or Remote Mode	RMU Incomer (FLAIR) MV Fault on HTA Wiring	PV Box (Safety) Emergency Stop	PV Box (Safety) Fire Alarm	PV Box (Safety) Doors contact closed	PV BOX Auxiliairy synthesis closed	RMU Incomer Voltage Presence

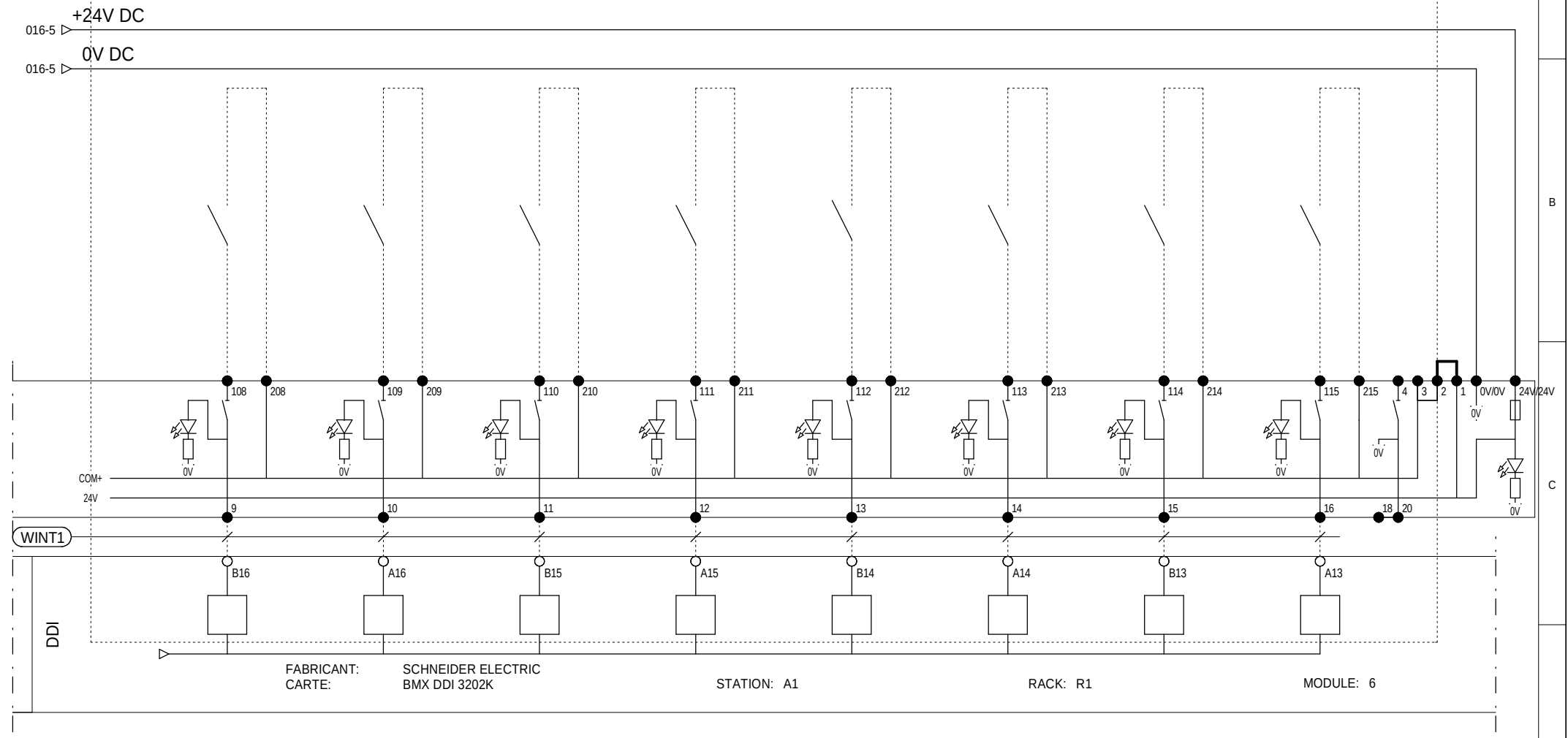

MCC

The technical information contained in this document is the exclusive property of Schneider Electric Industries S.A.S and cannot be used or disclosed to third parties of any kind without its written consent. Only those drawings and diagrams specifically referred to in a contract or order form are binding for execution. All devices shown in the diagrams are in open position, drawn out with operating mechanism discharged and all power sources off.

Les informations techniques contenues dans ce document sont la propriete exclusive de Schneider Electric Industries S.A.S et ne peuvent etre utilisees ou divulguees a des tiers quels qu'ils soient sans son accord ecrit. Seuls nous engagent nos devis et les plans et schemas annexes signes par nos representants. Les appareils representes sur ce schéma sont en position ouvert - désarmés - débrochés - toutes sources coupées.

Ind. Rev	Date Date		Archiv. Micro-filmed	Ind. Rev	Date Date	Modification / Modification	Archiv. Micro-filmed
00	18/12/2013	Edition originale / First issue					

ADVANCED HD Digital Inputs

PV MONITORING CONTROL CABINET (PV MCC) ADVANCED HD BASE

Validated for Pilot run
Printed on 2014/01/10

Schneider Electric

EAV5821701

Projet - No commande / Project - Order No.

Indice Rev 00

Folio Sheet 29

A3 suite - 11/2006

SPARE	SPARE	SPARE	SPARE	SPARE	SPARE	SPARE	SPARE
NOT USED	NOT USED	NOT USED	NOT USED	NOT USED	NOT USED	NOT USED	NOT USED

Additionnal TELEFAST ABE7 Intput Sub-base not mounted

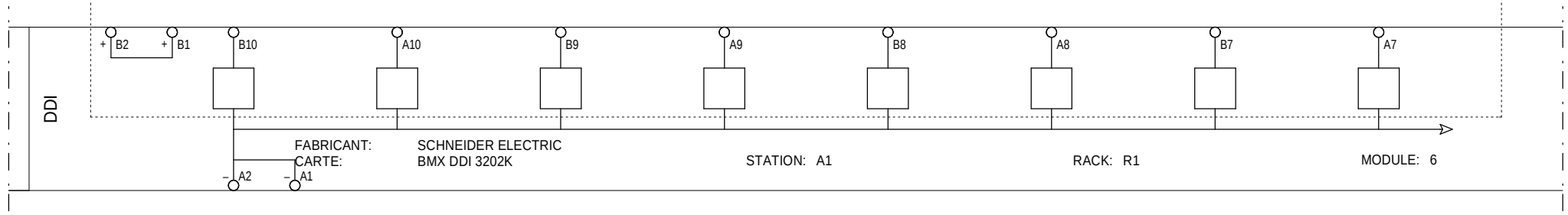

MCC

The technical information contained in this document is the exclusive property of Schneider Electric Industries S.A.S and cannot be used or disclosed to third parties of any kind without its written consent. Only those drawings and diagrams marked "Validated" under "Status" are valid for execution. All devices shown in the diagrams are in open position, drawn out with operating mechanism discharged and all power sources off.

Les informations techniques contenues dans ce document sont la propriete exclusive de Schneider Electric Industries S.A.S et ne peuvent etre utilisees ou divulguees a des tiers quels qu'ils soient sans son accord ecrit. Seuls nous engageant sur ce schéma sont en position ouvert - désarmés - débrochés - toutes sources coupées.

Ind. Rev	Date Date		Archiv. Micro-filmed	Ind. Rev	Date Date		Archiv. Micro-filmed
00	12/12/2013	Edition originale / First issue					

Modification / Modification

ADVANCED HD Digital Inputs

PV MONITORING CONTROL CABINET (PV MCC) ADVANCED HD BASE

Validated for Pilot run
Printed on 2014/01/10

Schneider Electric

EAV5821701

Projet - No commande / Project - Order No.

Indice Rev 00

Folio Sheet 30

A3 suite - 11/2006

SPARE	SPARE	SPARE	SPARE	SPARE	SPARE	SPARE	SPARE
NOT USED	NOT USED	NOT USED	NOT USED	NOT USED	NOT USED	NOT USED	NOT USED

Additionnal TELEFAST ABE7 Intput Sub-base not mounted

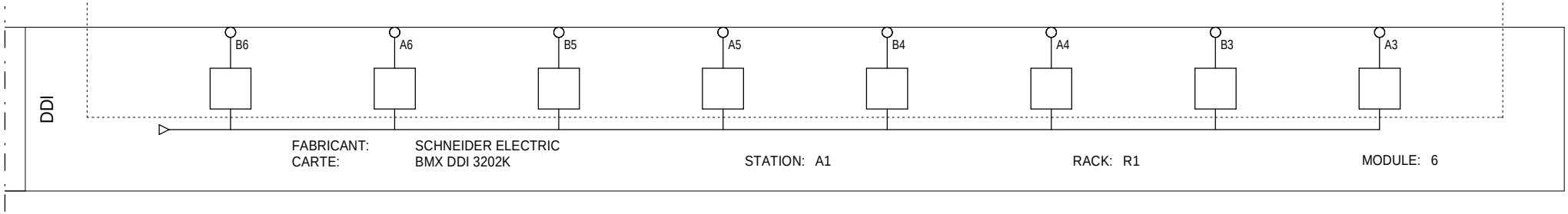

MCC

The technical information contained in this document is the exclusive property of Schneider Electric Industries S.A.S and cannot be used or disclosed to third parties of any kind without its written consent. Only those drawings and diagrams marked "certified" under "Validated" are authorized for execution. All devices shown in the diagrams are in open position, drawn out with operating mechanism discharged and all power sources off.

Les informations techniques contenues dans ce document sont la propriete exclusive de Schneider Electric Industries S.A.S et ne peuvent etre utilisees ou divulguees a des tiers quels qu'ils soient sans son accord ecrit. Seuls nous engagent ceux dessins portant la mention "certifie" sous "Validation". Les appareils representes sur ce schéma sont en position ouvert - désarmés - débrochés - toutes sources coupées.

Ind. Rev	Date Date		Archiv. Micro-filmed	Ind. Rev	Date Date	Modification / Modification	Archiv. Micro-filmed
00	12/12/2013	Edition originale / First issue					

ADVANCED HD Digital Inputs

PV MONITORING CONTROL CABINET (PV MCC)
ADVANCED HD BASE

Validated for Pilot run
Printed on 2014/01/10

Schneider Electric

EAV5821701

Projet - No commande / Project - Order No.	Indice Rev	Folio Sheet
	00	31

The technical information contained in this document is the exclusive property of Schneider Electric Industries S.A.S and cannot be used or disclosed to third parties of any kind without its written consent. Only those drawings and diagrams marked "for approval" or "for execution" are binding for execution. All drawings shown in this document are in open position, drawn out with operating mechanism discharged and all power sources off.

Les informations techniques contenues dans ce document sont la propriete exclusive de Schneider Electric Industries S.A.S et ne peuvent etre utilisees ou divulguees a des tiers quels qu'ils soient sans son accord ecrit. Seuls nous engageant sur ce schéma sont en position ouvert - désarmés - débrochés - toutes sources coupées.

PV BOX Internal Temperature	PV BOX External Temperature	PV BOX SPARE	PV BOX SPARE

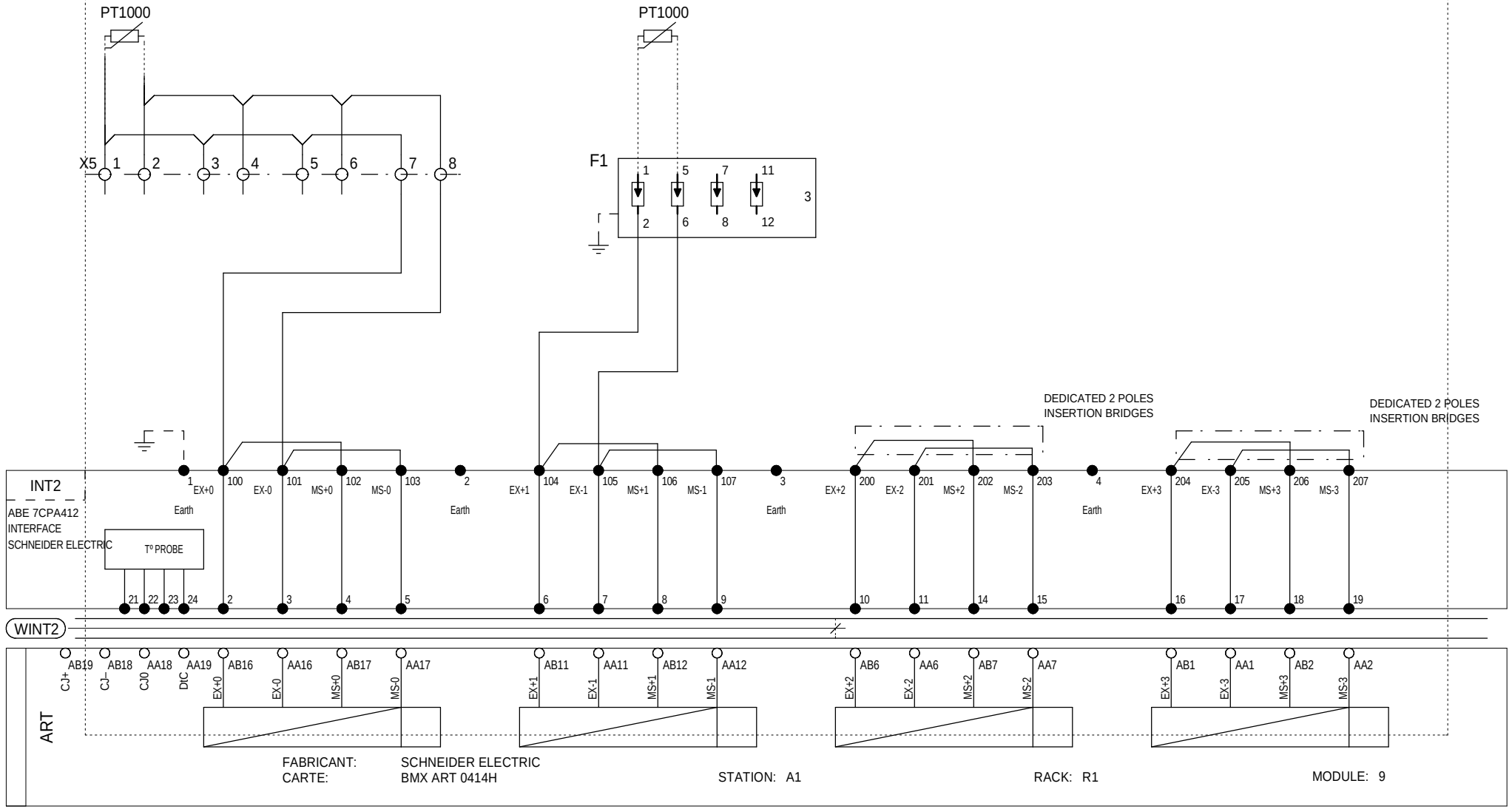

MCC

Ind. Rev	Date Date		Archiv. Micro-filmed	Ind. Rev	Date Date	Modification / Modification	Archiv. Micro-filmed
00	18/12/2013	Edition originale / First issue					

ADVANCED HD Analog Inputs

PV MONITORING CONTROL CABINET (PV MCC) ADVANCED HD BASE

Validated for Pilot run
Printed on 2014/01/10

Schneider Electric

EAV5821701

Projet - No commande Project - Order No.	Indice Rev	Folio Sheet
	00	32

A3 suite - 11/2006

The technical information contained in this document is the exclusive property of Schneider Electric Industries S.A.S and cannot be used or disclosed to third parties of any kind without its written consent. Only those drawings and diagrams marked "for execution" are to be used for execution. All drawings shown in this document are in open position, drawn out with operating mechanism discharged and all power sources off.

Les informations techniques contenues dans ce document sont la propriete exclusive de Schneider Electric Industries S.A.S et ne peuvent etre utilisees ou divulguees a des tiers quels qu'ils soient sans son accord ecrit. Seuls nous engageant sur ce schéma sont en position ouvert - désarmés - débrochés - toutes sources coupées.

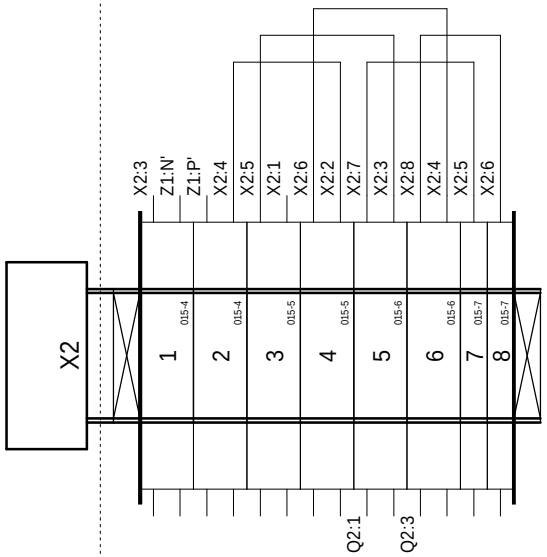

MCC

Ind. Rev	Date Date	Modification / Modification	Archiv. Micro-filmed	Ind. Rev	Date Date	Modification / Modification	Archiv. Micro-filmed
00	18/12/2013	Edition originale / First issue					

TERMINAL BLOCK : =+MCC-X2

PV MONITORING CONTROL CABINET
(PV MCC)
ADVANCED HD
BASE

Validated for Pilot Run
Printed on 2014/01/10

Schneider Electric

EAV5821701

Projet - No commande
Project - Order No.

Indice Rev 00

Folio Sheet 150

A3 suite - 11/2006

The technical information contained in this document is the exclusive propery of Schneider Electric Industries S.A.S and cannot be used or discloses to third parties of any kind without its written consent. Only those drawings and diagrams marked "for pilot run" are to be used for execution. All drawings shown in this document are in open position, drawn out with operating mechanism discharged and all power sources off.

Les informations techniques contenues dans ce document sont la propriete exclusive de Schneider Electric Industries S.A.S et ne peuvent etre utilisees ou divulguees a des tiers quels qu'ils soient sans son accord ecrit. Seuls nous engageant pour ce document les plans marques "pour mise en route". Les dessins ci-dessous ne montrent que l'appareillage representes sur ce schéma sont en position ouvert - désarmés - débrochés - toutes sources coupées.

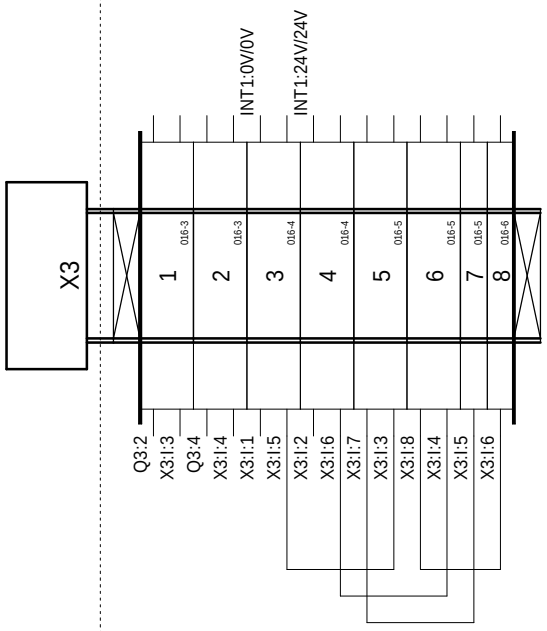

MCC

Ind. Rev	Date Date	Modification / Modification	Archiv. Micro-filmed	Ind. Rev	Date Date	Modification / Modification	Archiv. Micro-filmed
00	18/12/2013	Edition originale / First issue					

TERMINAL BLOCK : =+MCC-X3

PV MONITORING CONTROL CABINET
(PV MCC)
ADVANCED HD
BASE

Validated for Pilot Run
Printed on 2014/01/10

Schneider Electric

EAV5821701

Projet - No commande / Project - Order No.

Indice Rev 00

Folio Sheet 151

A3 suite - 11/2006

The technical information contained in this document is the exclusive property of Schneider Electric Industries S.A.S and cannot be used or disclosed to third parties of any kind without its written consent. Only those drawings and diagrams marked "Validated for Pilot Run" are to be used for execution. All drawings shown in this document are in open position, drawn out with operating mechanism discharged and all power sources off.

Les informations techniques contenues dans ce document sont la propriete exclusive de Schneider Electric Industries S.A.S et ne peuvent etre utilisees ou divulguees a des tiers quels qu'ils soient sans son accord ecrit. Seuls nous engageant sur ce schéma sont en position ouvert - désarmés - débrochés - toutes sources coupées.

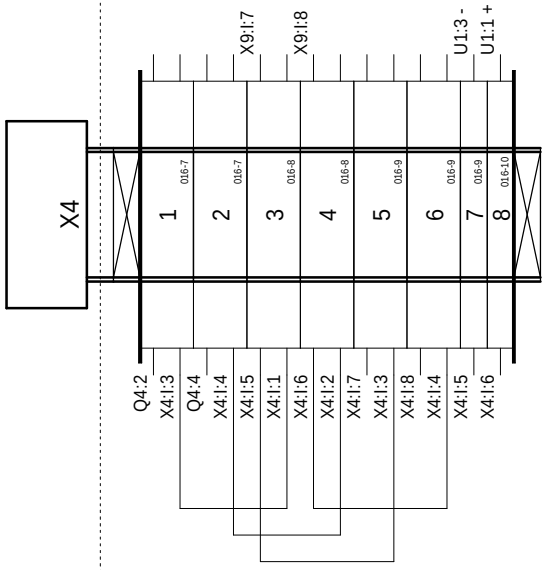

MCC

Ind. Rev	Date Date		Archiv. Micro-filmed	Ind. Rev	Date Date		Archiv. Micro-filmed
00	18/12/2013	Edition originale / First issue					

Modification / Modification

TERMINAL BLOCK : =+MCC-X4

PV MONITORING CONTROL CABINET
(PV MCC)
ADVANCED HD
BASE

Validated for Pilot Run
Printed on 2014/01/10

Schneider Electric

EAV5821701

Projet - No commande
Project - Order No.

Indice Rev 00

Folio Sheet 152

A3 suite - 11/2006

The technical information contained in this document is the exclusive property of Schneider Electric Industries S.A.S and cannot be used or disclosed to third parties of any kind without its written consent. Only those drawings and diagrams marked "approved for construction" are to be used for execution. All drawings shown in this document are in open position, drawn out with operating mechanism discharged and all power sources off.

Les informations techniques contenues dans ce document sont la propriete exclusive de Schneider Electric Industries S.A.S et ne peuvent etre utilisees ou divulguees a des tiers quels qu'ils soient sans son accord ecrit. Seuls nous engageant pour executer les plans et schemas marqués "bon pour execution" et les dessins montrés dans ce document. Tous les schéma sont en position ouvert - désarmés - débrochés - toutes sources coupées.

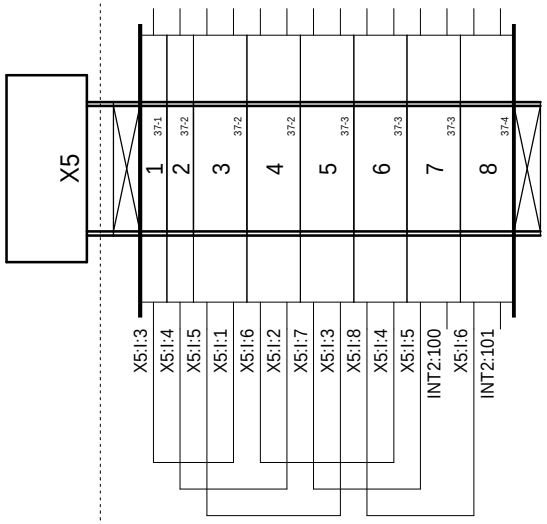

MCC

Ind. Rev	Date Date	Modification / Modification	Archiv. Micro-filmed	Ind. Rev	Date Date	Modification / Modification	Archiv. Micro-filmed
00	18/12/2013	Edition originale / First issue					

TERMINAL BLOCK : =+MCC-X5

PV MONITORING CONTROL CABINET
(PV MCC)
ADVANCED HD
BASE

Validated for Pilot run
Printed on 2014/01/10

Schneider Electric

EAV5821701

Projet - No commande / Project - Order No.	Indice Rev	Folio Sheet
	00	153

The technical information contained in this document is the exclusive property of Schneider Electric Industries S.A.S and cannot be used or disclosed to third parties of any kind without its written consent. Only those drawings and diagrams marked "certified" are to be used for execution. All drawings shown in this document are in open position, drawn out with operating mechanism discharged and all power sources off.

Les informations techniques contenues dans ce document sont la propriete exclusive de Schneider Electric Industries S.A.S et ne peuvent etre utilisees ou divulguees a des tiers quels qu'ils soient sans son accord ecrit. Seuls nous engageant sur ce schéma sont en position ouvert - désarmés - débrochés - toutes sources coupées.

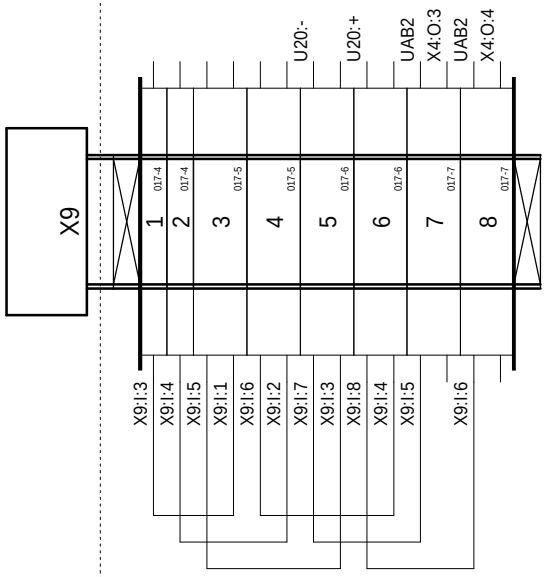

MCC

Ind. Rev	Date Date		Archiv. Micro-filmed	Ind. Rev	Date Date		Archiv. Micro-filmed
00	18/12/2013	Edition originale / First issue					

Modification / Modification

TERMINAL BLOCK : =+MCC-X9

PV MONITORING CONTROL CABINET
(PV MCC)
ADVANCED HD
BASE

Validated for Pilot Run
Printed on 2014/01/10

Schneider Electric

EAV5821701

Projet - No commande
Project - Order No.

Indice Rev 00

Folio Sheet 154

A3 suite - 11/2006

The technical information contained in this document is the exclusive property of Schneider Electric Industries S.A.S and cannot be used or disclosed to third parties of any kind without its written consent. Only those drawings and diagrams marked "for order" or "for approval" are valid for execution. All drawings shown in this document are in open position, drawn out with operating mechanism discharged and all power sources off.

Les informations techniques contenues dans ce document sont la propriete exclusive de Schneider Electric Industries S.A.S et ne peuvent etre utilisees ou divulguees a des tiers quels qu'ils soient sans son accord ecrit. Seuls nous engageant sur ce schéma sont en position ouvert - désarmés - débrochés - toutes sources coupées.

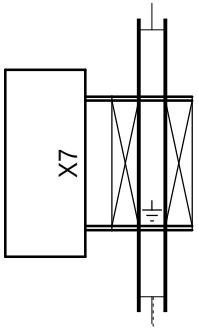

PE

LV BOX AUXILIARY SUPPLY

INCOMING 230V AC 50/60 Hz

MCC

Ind. Rev	Date Date		Archiv. Micro-filmed	Ind. Rev	Date Date		Archiv. Micro-filmed
00	18/12/2013	Edition originale / First issue					

Modification / Modification

TERMINAL BLOCK : =+MCC-X7

PV MONITORING CONTROL CABINET
(PV MCC)
ADVANCED HD
BASE

Validated for Pilot run
Printed on 2014/01/10

Schneider Electric

EAV5821701

Projet - No commande
Project - Order No.

Indice Rev 00

Folio Sheet 155

A3 suite - 11/2006

The technical information contained in this document is the exclusive propery of Schneider Electric Industries S.A.S and cannot be used or disclosed to third parties of any kind without its written consent. Only those drawings and diagrams marked "certified" or "for execution" are binding for execution. All drawings shown in this document are in open position, drawn out with operating mechanism discharged and all power sources off.

Les informations techniques contenues dans ce document sont la propriete exclusive de Schneider Electric Industries S.A.S et ne peuvent etre utilisees ou divulguees a des tiers quels qu'ils soient sans son accord ecrit. Seuls nous engageant sur ce schéma sont les plans et schemas « pour execution » et les documents « certifiés » ou « pour execution ». Les appareils representés sur ce schéma sont en position ouvert - désarmés - débrochés - toutes sources coupées.

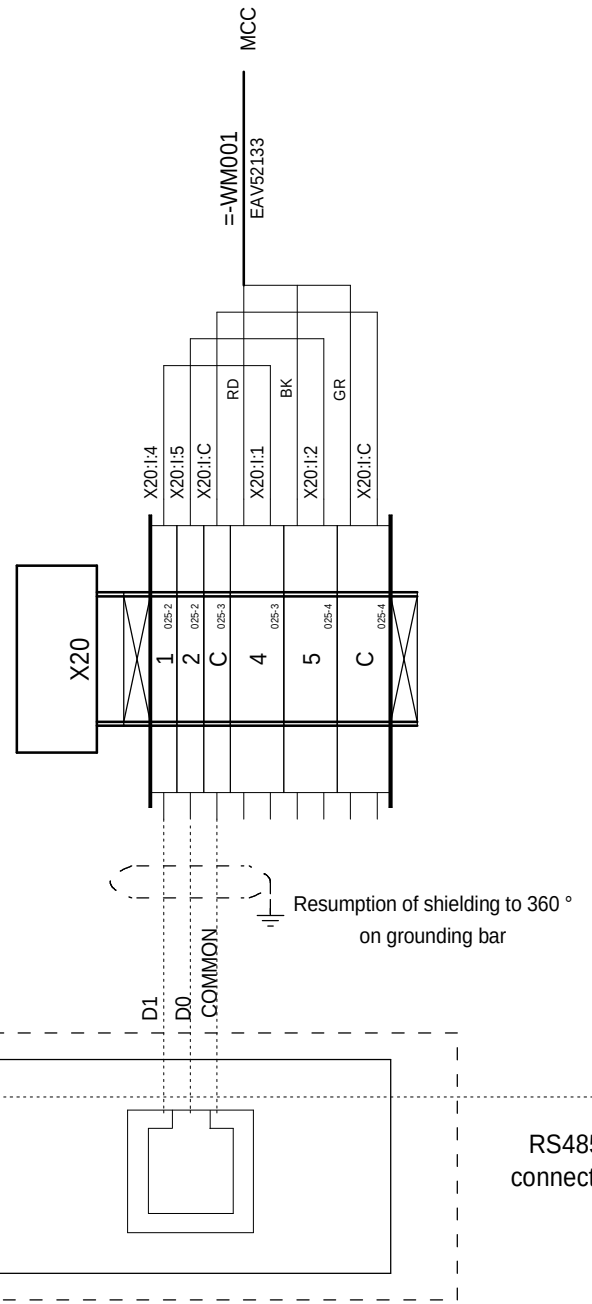

RS485 MODBUS SERIAL INVERTER2
connected to DC BOX 2 by DAISY CHAIN

MCC

Ind. Rev	Date Date	Modification / Modification	Archiv. Micro-filmed	Ind. Rev	Date Date	Modification / Modification	Archiv. Micro-filmed
00	18/12/2013	Edition originale / First issue					

TERMINAL BLOCK : =+MCC-X20

PV MONITORING CONTROL CABINET
(PV MCC)
ADVANCED HD
BASE

Validated for Pilot run
Printed on 2014/01/10

Schneider Electric

EAV5821701

Projet - No commande
Project - Order No.

Indice Rev 00

Folio Sheet 156

A3 suite - 11/2006

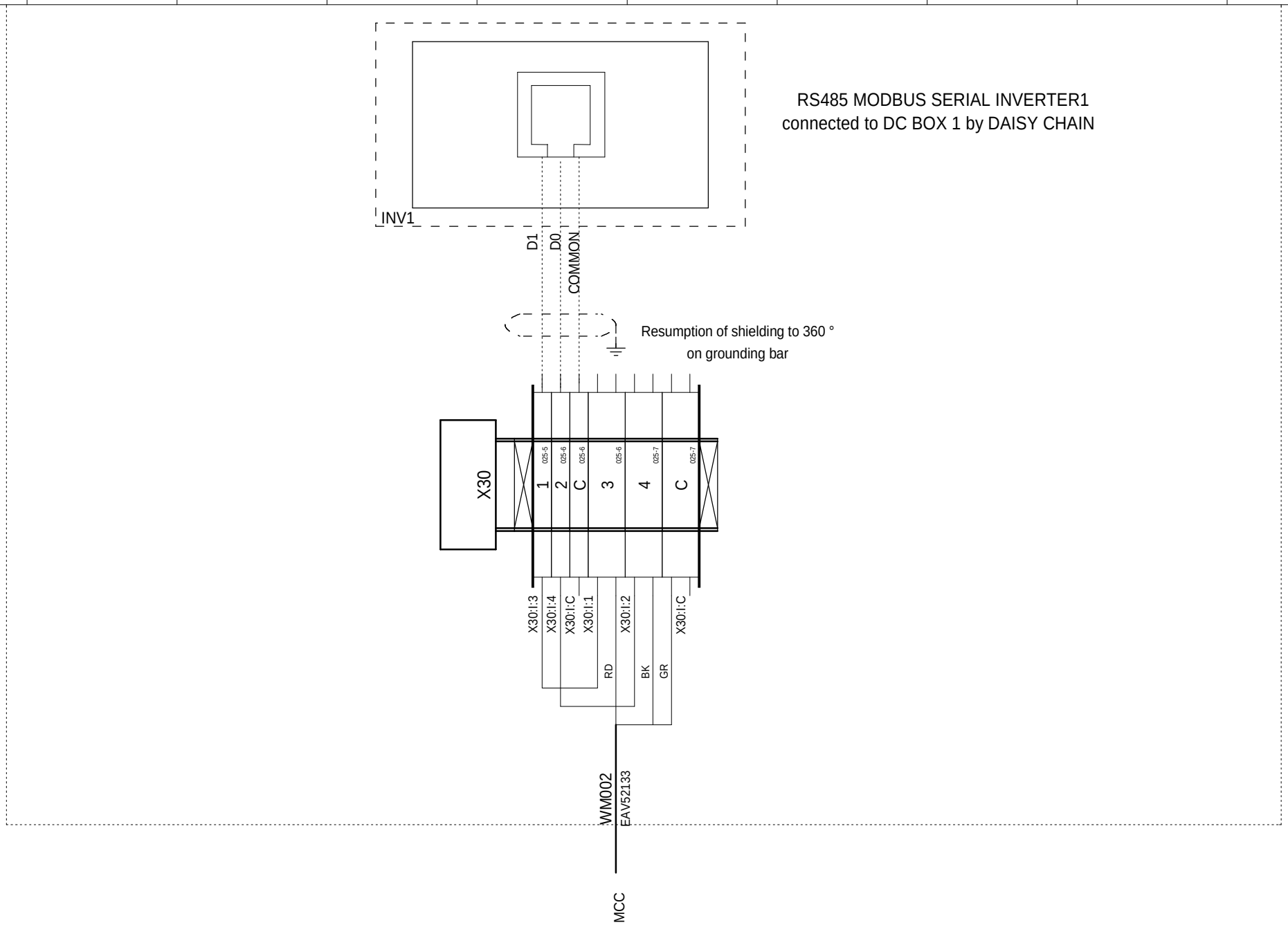

MCC

The technical information contained in this document is the exclusive property of Schneider Electric Industries S.A.S and cannot be used or disclosed to third parties of any kind without its written consent. Only those drawings and diagrams marked "for execution" and/or "for approval" are intended for execution. All drawings shown in this document are in open position, drawn out with operating mechanism discharged and all power sources off.

Les informations techniques contenues dans ce document sont la propriete exclusive de Schneider Electric Industries S.A.S et ne peuvent etre utilisees ou divulguees a des tiers quels qu'ils soient sans son accord ecrit. Seuls nous engagent ou/et seulement les plans et schemas marqués "a la construction" et/ou "a l'approbation". Les appareils representes sur ce schéma sont en position ouvert - désarmés - débrochés - toutes sources coupées.

Ind. Rev	Date Date	Modification / Modification	Archiv. Micro-filmed	Ind. Rev	Date Date	Modification / Modification	Archiv. Micro-filmed
00	18/12/2013	Edition originale / First issue					

TERMINAL BLOCK : =+MCC-X30

PV MONITORING CONTROL CABINET
(PV MCC)
ADVANCED HD
BASE

Validated for Pilot run
Printed on 2014/01/10

Schneider Electric

EAV5821701

Projet - No commande
Project - Order No.

Indice Rev 00

Folio Sheet 157

A3 suite - 11/2006

The technical information contained in this document is the exclusive property of Schneider Electric Industries S.A.S and cannot be used or disclosed to third parties of any kind without its written consent. Only those drawings and diagrams marked "Validated for execution" or "Approved for execution" are authorized for execution. All drawings shown in this document are in open position, drawn out with operating mechanism discharged and all power sources off.

Les informations techniques contenues dans ce document sont la propriete exclusive de Schneider Electric Industries S.A.S et ne peuvent etre utilisees ou divulguees a des tiers quels qu'ils soient sans son accord ecrit. Seuls nous engageant les dessins marqués "Valides pour execution" ou "Approuvés pour execution". Les appareils représentés sur ce schéma sont en position ouvert - désarmés - débrochés - toutes sources coupées.

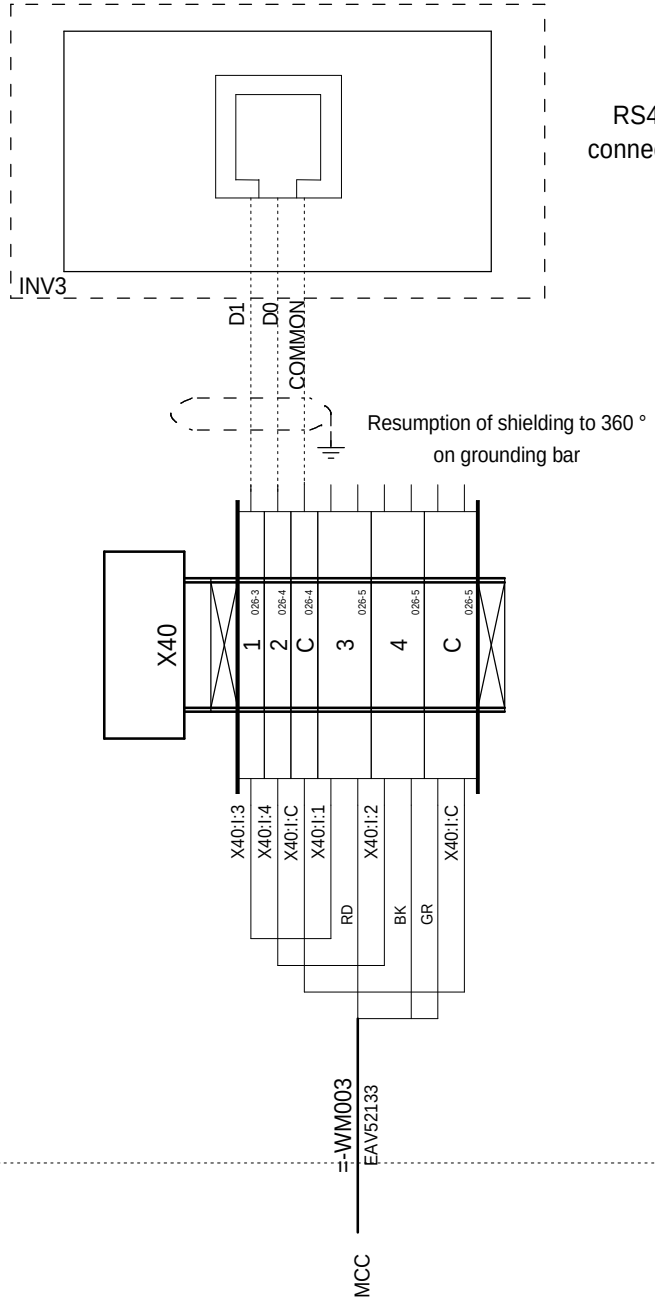

MCC

Ind. Rev	Date Date	Modification / Modification	Archiv. Micro-filmed	Ind. Rev	Date Date	Modification / Modification	Archiv. Micro-filmed
00	18/12/2013	Edition originale / First issue					

TERMINAL BLOCK : =+MCC-X40

PV MONITORING CONTROL CABINET
(PV MCC)
ADVANCED HD
BASE

Validated for Pilot run
Printed on 2014/01/10

Schneider Electric

EAV5821701

Projet - No commande / Project - Order No.	Indice Rev	Folio Sheet
	00	158

The technical information contained in this document is the exclusive property of Schneider Electric Industries S.A.S and cannot be used or disclosed to third parties of any kind without its written consent. Only those drawings and diagrams marked "Validated for Pilot Run" are authorized for execution. All drawings shown in this document are in open position, drawn out with operating mechanism discharged and all power sources off.

Les informations techniques contenues dans ce document sont la propriete exclusive de Schneider Electric Industries S.A.S et ne peuvent etre utilisees ou divulguees a des tiers quels qu'ils soient sans son accord ecrit. Seuls nous engageant les dessins marqués "Validated for Pilot Run" et ceux qui sont en execution. Les appareils representes sur ce schéma sont en position ouvert - désarmés - débrochés - toutes sources coupées.

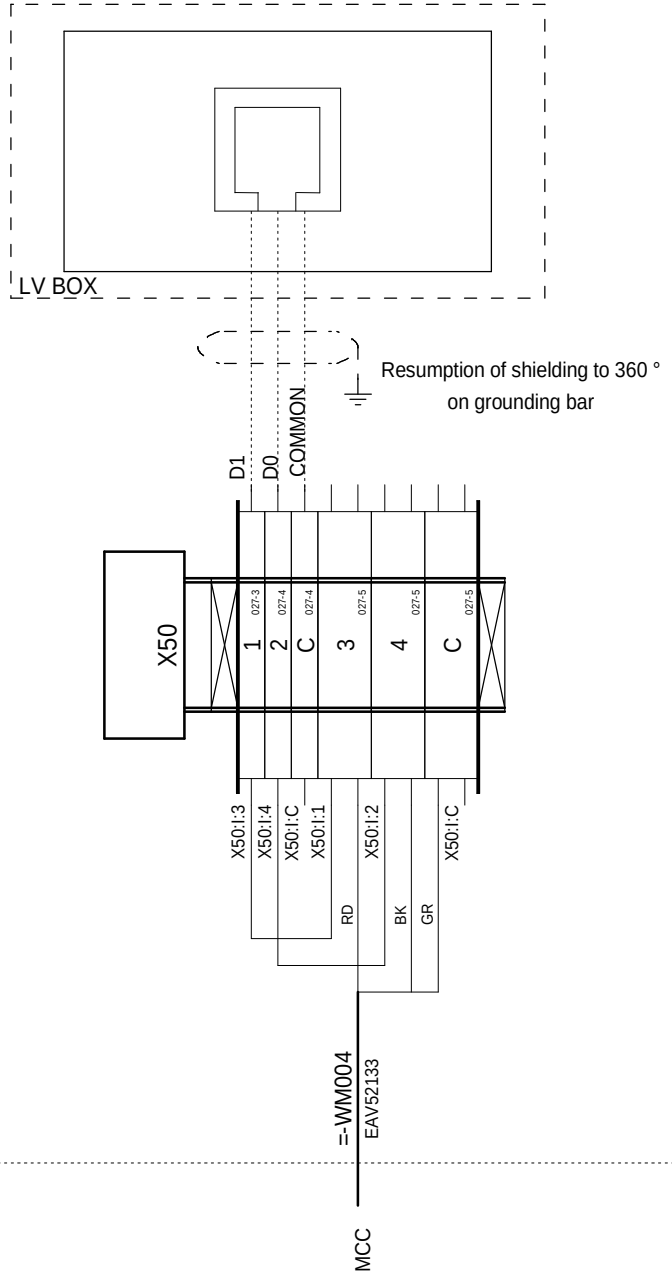

MCC

Ind. Rev	Date Date		Archiv. Micro-filmed	Ind. Rev	Date Date		Archiv. Micro-filmed
00	18/12/2013	Edition originale / First issue					

Modification / Modification

TERMINAL BLOCK : =+MCC-X50

PV MONITORING CONTROL CABINET
(PV MCC)
ADVANCED HD
BASE

Validated for Pilot Run
Printed on 2014/01/10

Schneider Electric

EAV5821701

Projet - No commande
Project - Order No.

Indice Rev 00

Folio Sheet 159

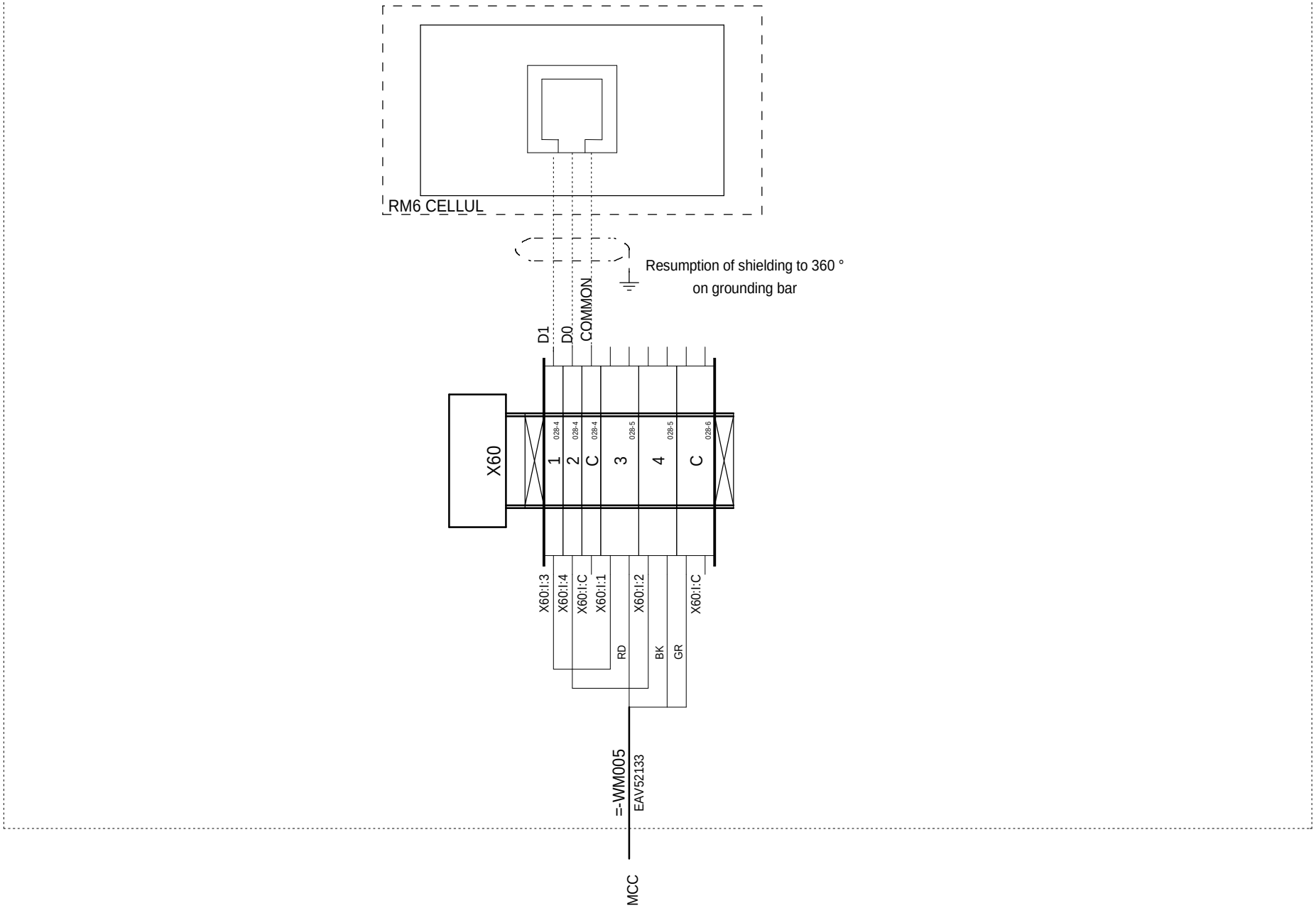

MCC

The technical information contained in this document is the exclusive property of Schneider Electric Industries S.A.S and cannot be used or disclosed to third parties of any kind without its written consent. Only those drawings and diagrams marked "Certified" are valid for execution. All drawings shown in this document are in open position, drawn out with operating mechanism discharged and all power sources off.

Les informations techniques contenues dans ce document sont la propriete exclusive de Schneider Electric Industries S.A.S et ne peuvent etre utilisees ou divulguees a des tiers quels qu'ils soient sans son accord ecrit. Seuls nous engageant sur ce schéma sont en position ouvert - désarmés - débrochés - toutes sources coupées.

Ind. Rev	Date Date	Modification / Modification	Archiv. Micro-filmed	Ind. Rev	Date Date	Modification / Modification	Archiv. Micro-filmed
00	18/12/2013	Edition originale / First issue					

TERMINAL BLOCK : =+MCC-X60

PV MONITORING CONTROL CABINET
(PV MCC)
ADVANCED HD
BASE

Validated for Pilot run
Printed on 2014/01/10

Schneider Electric

EAV5821701

Projet - No commande
Project - Order No.

Indice Rev 00

Folio Sheet 160

A3 suite - 11/2006

Localisation (Location)	Installation (Function)	Repère (Tag)	Page (Sheet)	Designation	Fabricant (Manufacturer)	Ref. fabricant (Manufacturer Ref.)
MCC		24V DC HARNESS	015	H07V2K POWER SUPPLY HARNESS Q1 to Z1	COMMATEL	EAV51480
			015	H07V2K POWER SUPPLY HARNESS X2 to X8	COMMATEL	EAV51762
			015	H07V2K POWER SUPPLY HARNESS Z1 to X2, X4 to U1, Q2 to AP1R1 and Q3 to X3	COMMATEL	EAV51481
			015	H07V2K POWER SUPPLY HARNESS Q4 to X4	COMMATEL	EAV51763
			015	H07V2K POWER SUPPLY HARNESS X3 to INT1	COMMATEL	EAV51764
			015	H07V2K EARTHING HARNESS Z1	COMMATEL	EAV51862
			015	H07V2K EARTHING HARNESS INT2 or INT5	COMMATEL	EAV51864
			015	H07V2K EARTHING HARNESS U1	COMMATEL	EAV51269
			015	H07V2K POWER SUPPLY HARNESS F1 to INT2	COMMATEL	EAV52232
			015	H07V2K POWER SUPPLY HARNESS X5 to INT2	COMMATEL	EAV52233
			015	H07V2K POWER SUPPLY HARNESS X4 to X9	COMMATEL	EAV51484
			015	H07V2K POWER SUPPLY HARNESS X9 to U20	COMMATEL	EAV51486
		230V AC HARNESS	18	H07V2K POWER SUPPLY HARNESS Q6 to R1 via H1	COMMATEL	EAV52140
		AP1R1	27	HARH 12 SLOTS RACK	SCHNEIDER ELECTRIC	BMX XBP 1200H
			27	SHIELD KIT Size1 WIRE CLAMP for 5...11 mm² cable	SCHNEIDER ELECTRIC	STB XSP 3020
			27	12 SLOTS SHIELD KIT	SCHNEIDER ELECTRIC	BMX XSP 1200
		ART	27	HARSH 4 ISOLATED CHANNELS ANALOG INPUTS for Thermosensors and Thermocouples, Connector 40 pins	SCHNEIDER ELECTRIC	BMX ART 0414H
		CPS	27	24VDC ISOLATED POWER SUPPLY MODULE, 3.3VDC 2.5A, 24VDC 0.7A	SCHNEIDER ELECTRIC	BMX CPS 2010
		CPU	27	4096K RAM Processor Module, 10BASE-T/100BASE-TX (RJ45) ,Serial Port, USB Port	SCHNEIDER ELECTRIC	BMX P34 2020
			27	128 MB Memory Card	SCHNEIDER ELECTRIC	BMX RMS 128MPF
		DDI	27	24VDC 32 Channels DIGITAL INPUTS MODULE, Connector 40 pins	SCHNEIDER ELECTRIC	BMX DDI 3202K
		F1	32	PROTECTIVE PLUG PT, 4-core floating signal circuit protective circuit, In:10kA (8/20)-Uc:27VDC	PHOENIX CONTACT	2839240
			32	BASE ELEMENT FOR PROTECTIVE PLUG PT (4-core floating signal circuit protective circuit)	PHOENIX CONTACT	2839402
		F5	22	SURGE PROTECTION PLUG, normal mode voltage coarse, 2 floating signal wires IT protection,In:10kA (8/20)-Uc:5,2	PHOENIX CONTACT	2858030
			22	BASE ELEMENT FOR SURGE PROTECTION PLUG (protective circuit for a 2-core floating signal circuit)	PHOENIX CONTACT	2856113
		F6	22	SURGE PROTECTION PLUG, normal mode voltage coarse, 2 floating signal wires IT protection,In:10kA (8/20)-Uc:5,2	PHOENIX CONTACT	2858030
			22	BASE ELEMENT FOR SURGE PROTECTION PLUG (protective circuit for a 2-core floating signal circuit)	PHOENIX CONTACT	2856113
		F7	22	SURGE PROTECTION PLUG, normal mode voltage coarse, 2 floating signal wires IT protection,In:10kA (8/20)-Uc:5,2	PHOENIX CONTACT	2858030
			22	BASE ELEMENT FOR SURGE PROTECTION PLUG (protective circuit for a 2-core floating signal circuit)	PHOENIX CONTACT	2856113
		H1	18	ELECTRONIC HYGROTHERM, HUMIDITY RANGE : 10-95%RH, SUPPLY VOLTAGE : 240VAC - 50/60Hz	SCHNEIDER ELECTRIC	NSYCCOHYT230VID
		INT1	28	PASSIVE INSULATED 16 CHANNELS DIGITAL I/O CONNECTION SUB-BASE, HE10 20 pins,	SCHNEIDER ELECTRIC	ABE 7H16S21
		INT2	32	4 CHANNELS SUB-BASE ANALOG CONNECTION FOR THERMOCOUPLES AND THERMOSENSORS, D SUB 25 pins	SCHNEIDER ELECTRIC	ABE 7CPA412
			32	2 POLES GREY TERMINAL BLOCK INSERTION BRIDGE EB 2-10, 10.16 mm pitch	PHOENIX CONTACT	0203153
		NOE	27	HARSH 10/100Mbit/s ETHERNET TCP/IP NETWORK MODULE, 10Base-TX/100Base-TX (RJ45) port	SCHNEIDER ELECTRIC	BMX NOE 0110H
		NOM1	27	HARSH RS485 MODBUS SERIAL MODULE, 2 RJ45 Ports	SCHNEIDER ELECTRIC	BMX NOM 0200H
		NOM2	27	HARSH RS485 MODBUS SERIAL MODULE, 2 RJ45 Ports	SCHNEIDER ELECTRIC	BMX NOM 0200H
		NOM3	27	HARSH RS485 MODBUS SERIAL MODULE, 2 RJ45 Ports	SCHNEIDER ELECTRIC	BMX NOM 0200H
		NOR	27	HARSH RTU COMMUNICATION MODULE,10Base-TX/100Base-TX Port (RJ45), Serial Port (RJ45)	SCHNEIDER ELECTRIC	BMX NOR 0200H
		Q1	015	iSW SWITCH-DISCONNECTOR 415V AC/DC 2P 40A	SCHNEIDER ELECTRIC	A9S60240
		Q2	016	MINIATURE CIRCUIT BREAKER FOR DC VOLTAGE C60H-DC 2 POLES 2A	SCHNEIDER ELECTRIC	A9N61522
		Q3	016	MINIATURE CIRCUIT BREAKER FOR DC VOLTAGE C60H-DC 2 POLES 2A	SCHNEIDER ELECTRIC	A9N61522
		Q4	016	MINIATURE CIRCUIT BREAKER FOR DC VOLTAGE C60H-DC 2 POLES 2A	SCHNEIDER ELECTRIC	A9N61522
		Q6	18	iC60N CIRCUIT-BREAKER 2P 3A, 440VAC/25kA 133VDC/6kA, CURVE D	SCHNEIDER ELECTRIC	A9F75203
		R1	18	INSULATED RESISTANCE HEATER WITH FAN, NOMINAL POWER : 170W - NOMINAL VOLTAGE : 230VAC	SCHNEIDER ELECTRIC	NSYCR170W230VVC
		U1	20	ETHERNET SWITCH 6 PORTS 10/100 TX and 2 PORTS 100 FX-MM	TELEMECANIQUE	TCSESM083F2CU0
		U20	21	12 Mbp/s PROFIBUS REMOTE MASTER	SCHNEIDER ELECTRIC	TCSEGPA23F14F
		UAB1	22	12 Mbp/s PROFIBUS MODULAR REPEATER ISOLATOR, supply 24V DC	PHOENIX CONTACT	2708863
			22	TBUS DIN RAIL TERMINAL BLOCK (power supply and communication housing)	PHOENIX CONTACT	2709561
		UAB2	22	12 Mbp/s PROFIBUS MODULAR REPEATER ISOLATOR, supply 24V DC	PHOENIX CONTACT	2708863
			22	TBUS DIN RAIL TERMINAL BLOCK (power supply and communication housing)	PHOENIX CONTACT	2709561

The technical information contained in this document is the exclusive property of Schneider Electric Industries S.A.S and cannot be used or disclosed to third parties of any kind without its written consent. Only those drawings and documents specifically agreed to in writing are intended for use with the equipment described herein. Drawings are in open position, drawn out with operating mechanism discharged and all power sources off.

Les informations techniques contenues dans ce document sont la propriete exclusive de Schneider Electric Industries S.A.S et ne peuvent etre utilisees ou divulguees a des tiers quels qu'ils soient sans son accord ecrit. Seuls nous engageant les dessins ci-joints, en phase d'ouverture et alimentations coupees, les contacteurs et les appareils representes sur ce schéma sont en position ouvert - désarmés - débrochés - toutes sources coupées.

Ind. (Rev)	Date		Archiv. (Micro-filmed)	Ind. (Rev)	Date	Modification / Modification	Archiv. (Micro-filmed)
00	18/12/2013	Edition originale / First issue					

EQUIPMENT LIST

PV MONITORING CONTROL CABINET (PV MCC) ADVANCED HD BASE

Validated for Pilot Run
Printed on 2014/01/10

Schneider Electric

EAV5821701

Projet - No commande (Project - Order No.) | Indice (Rev) 00 | Folio (Sheet) 500

Nom composant / Component name: Localisation (Location)	Installation (Function)	Repère (Tag)	Page (Sheet)	Designation	Fabricant (Manufacturer)	Ref. fabricant (Manufacturer Ref.)
		WET001	20	S/FTP Cat6A SHIELDED ETHERNET CORD, 4-Twisted Pair, Gray LSZH sheath, RJ45 Connectors, 0.6m	FOLAN	HRB 45953
		WET002	20	S/FTP Cat6A SHIELDED ETHERNET CORD, 4-Twisted Pair, Gray LSZH sheath, RJ45 Connectors, 0.6m	FOLAN	HRB 45953
		WET003	20	S/FTP Cat6A SHIELDED ETHERNET CORD, 4-Twisted Pair, Gray LSZH sheath, RJ45 Connectors, 0.6m	FOLAN	HRB 45953
		WET004	20	S/FTP Cat6A SHIELDED ETHERNET CORD, 4-Twisted Pair, Gray LSZH sheath, RJ45 Connectors,1m	FOLAN	EAV58503
		WINT1	28	PRE-FORMED CONNECTING CORD FOR DIGITAL I/O BMX * MODULE, Connectors FCN 40pins and 1xHE10 20pins	SCHNEIDER ELECTRIC	BMX FCC 051
		WINT2	32	PRE-FORMED CONNECTING CORD FOR ANALOG BMX ART * MODULE, Connectors FCN 40pins and D Sub 25pins	SCHNEIDER ELECTRIC	BMX FCA152
		WM001	23	HARNESS OF 5 OUTER BRAIDED SHIELD RS485 MODBUS CORDS, CLASS 6A S/FTP, Tierce 0.34², RJ45 Connector	COMMATEL	EAV52133
		WM002	23	HARNESS OF 5 OUTER BRAIDED SHIELD RS485 MODBUS CORDS, CLASS 6A S/FTP, Tierce 0.34², RJ45 Connector	COMMATEL	EAV52133
		WM003	24	HARNESS OF 5 OUTER BRAIDED SHIELD RS485 MODBUS CORDS, CLASS 6A S/FTP, Tierce 0.34², RJ45 Connector	COMMATEL	EAV52133
		WM004	25	HARNESS OF 5 OUTER BRAIDED SHIELD RS485 MODBUS CORDS, CLASS 6A S/FTP, Tierce 0.34², RJ45 Connector	COMMATEL	EAV52133
		WM005	26	HARNESS OF 5 OUTER BRAIDED SHIELD RS485 MODBUS CORDS, CLASS 6A S/FTP, Tierce 0.34², RJ45 Connector	COMMATEL	EAV52133
		WO001	19	MULTIMOD 50/125µm 2.8mm ZIPCORD CORD, SC-PC/SC-PC Connectors, GREY, 2m	FOLAN	502102221N
		WO002	19	MULTIMOD 50/125µm 2.8mm ZIPCORD CORD, SC-PC/SC-PC Connectors, GREY, 2m	FOLAN	502102221N
		WP001	21	TYP A 12 Mbp/s PROFIBUS DP CORD, Shielded Twisted Pair 0.34², Right and 45°D-SUB 9pins	COMMATEL	EAV51488
		WP002	22	TYP A 12 Mbp/s PROFIBUS DP CORD, Shielded Twisted Pair 0.34², Right D-SUB 9pins	COMMATEL	EAV51487
		WP003	22	TYP A 12 Mbp/s PROFIBUS DP CORD, Shielded Twisted Pair 0.34², Right D-SUB 9pins	COMMATEL	EAV53598
		WP004	22	TYP A 12 Mbp/s PROFIBUS DP CORD, Shielded Twisted Pair 0.34², Right D-SUB 9pins	COMMATEL	EAV51489
		X2	150	4 Points TERMINAL ARISES, 2.5mm2 , Grey	SCHNEIDER ELECTRIC	NSYTRR24
		X3	151	4 Points TERMINAL ARISES, 2.5mm2 , Grey	SCHNEIDER ELECTRIC	NSYTRR24
		X4	152	4 Points TERMINAL ARISES, 2.5mm2 , Grey	SCHNEIDER ELECTRIC	NSYTRR24
		X5	153	4 Points TERMINAL ARISES, 2.5mm2 , Grey	SCHNEIDER ELECTRIC	NSYTRR24
		X7	154	2 Points TERMINAL ARISES PE, 2.5mm2, Yellow-Green	SCHNEIDER ELECTRIC	NSYTRR22PE
		X8	016	CUTABLE COMB BUSBAR 2P 100A 12 MODULES	SCHNEIDER ELECTRIC	A9XPH212
			016	SET OF 4 CONNECTORS, 100A monoconnect	SCHNEIDER ELECTRIC	A9XPCM04
			016	COMB BUSBAR SIDE COVER	SCHNEIDER ELECTRIC	A9XPE210
		X9	155	4 Points TERMINAL ARISES, 2.5mm2 , Grey	SCHNEIDER ELECTRIC	NSYTRR24
		X20	156	2 Points TERMINAL ARISES, 1.5mm², Grey	PHOENIX CONTACT	3031076
		X30	157	2 Points TERMINAL ARISES, 1.5mm², Grey	PHOENIX CONTACT	3031076
		X40	158	2 Points TERMINAL ARISES, 1.5mm², Grey	PHOENIX CONTACT	3031076
		X50	159	2 Points TERMINAL ARISES, 1.5mm², Grey	PHOENIX CONTACT	3031076
		X60	160	2 Points TERMINAL ARISES, 1.5mm², Grey	PHOENIX CONTACT	3031076
		XFO1	19	MALAGA BOX 8SC, 5 harness grommets	FOLAN	621131001
			19	MOUNTED SC-PC MULTIMOD FITTING	FOLAN	211011023
			19	8 SPLICES BOX	FOLAN	359031021
			19	Mounted Multimod Pigtails 50/125µm 2.8mm, SC-PC Connector, yellow, 1 m	FOLAN	511102063N
		Z1	015	EMI FILTER, Rated Current 6A	SCHAFFNER	FN 2090-6-06

The technical information contained in this document is the exclusive property of Schneider Electric Industries S.A.S and cannot be used or disclosed to third parties of any kind without its written consent. Only those drawings and diagrams permitted for use by Schneider Electric are valid for use with the equipment shown in the diagrams are in open position, drawn out with operating mechanism discharged and all power sources off.

Les informations techniques contenues dans ce document sont la propriete exclusive de Schneider Electric Industries S.A.S et ne peuvent etre utilisees ou divulguees a des tiers quels qu'ils soient sans son accord ecrit. Seuls nous engagent les dessins et diagrammes autorises par Schneider Electric et conformes aux appareils representes sur ce schéma sont en position ouvert - désarmés - débrochés - toutes sources coupées.

Ind. (Rev)	Date	Modification / Modification	Archiv. (Micro-filmed)	Ind. (Rev)	Date	Modification / Modification	Archiv. (Micro-filmed)
00	18/12/2013	Edition originale / First issue					

EQUIPMENT LIST

PV MONITORING CONTROL CABINET (PV MCC)
ADVANCED HD BASE

Validated for Pilot run
Printed on 2014/01/10

Schneider Electric

EAV5821701

Projet - No commande (Project - Order No.)

Indice (Rev): 00

Folio (Sheet): 501

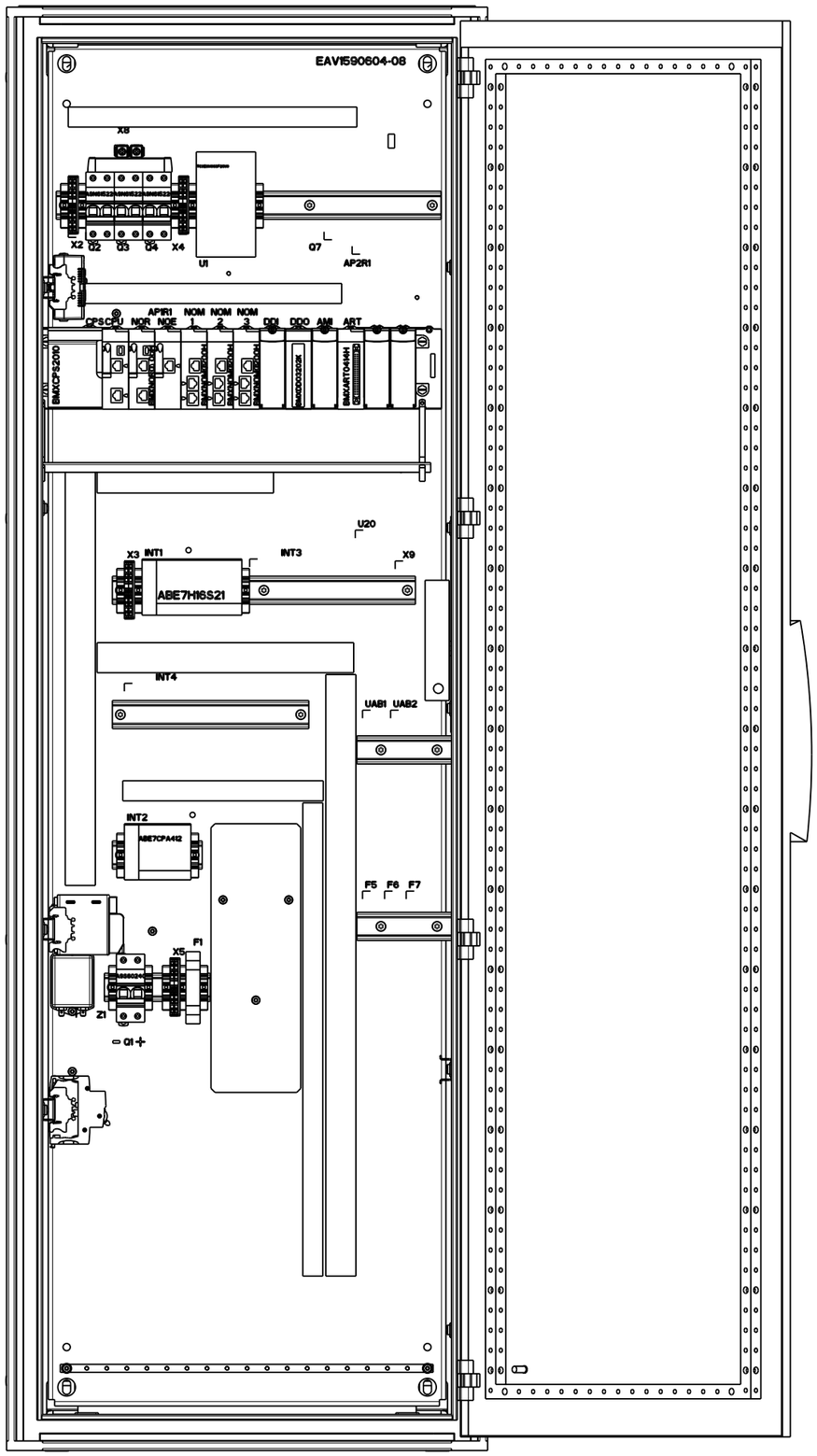

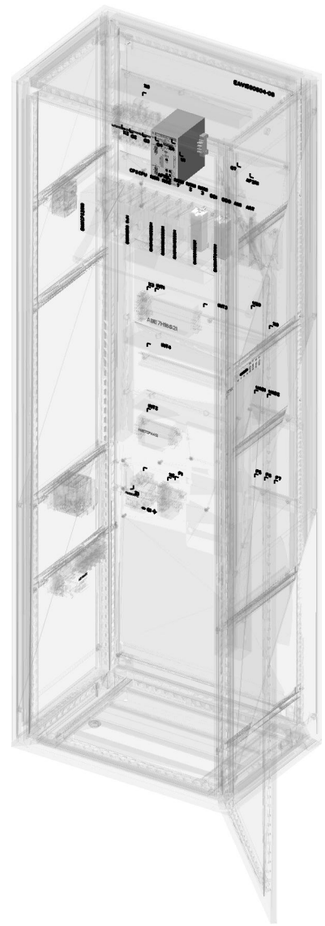

SCALE 0.070

SCALE 0.070

	Scale: 0.140	Tolerancing Standard :	Units of measure :
Schneider Electric	PV MCC ADVANCED PV MCC ADVANCED		
	Number: EAV1361202	Revision: 02	Sheet: 1/2

The information is highly confidential and is the exclusive property of Schneider Electric copyright reserved. This drawing must not be used for any purpose other than that expressly permitted in writing by the owners and must not be disclosed or reproduced in any way without permission from the owners in writing. This drawing must be returned to the owners when the purpose has ceased.

State: Under Promotion for Pilot Run
Printed on 2014/02/05

Original format A3

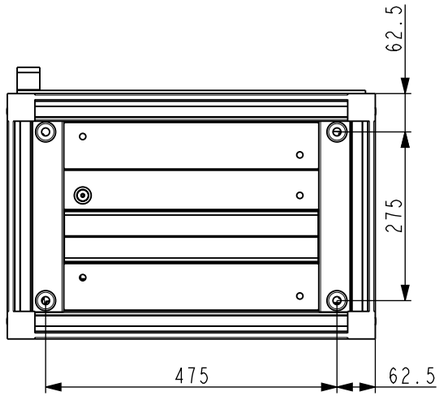

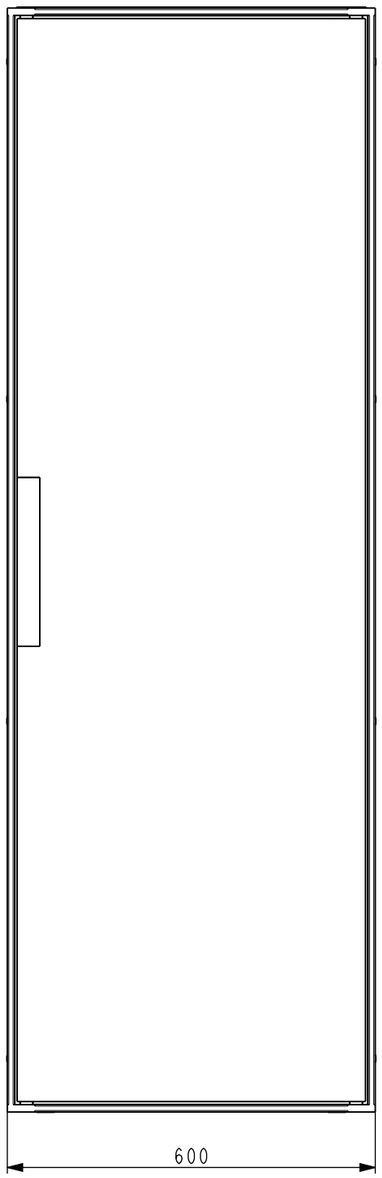

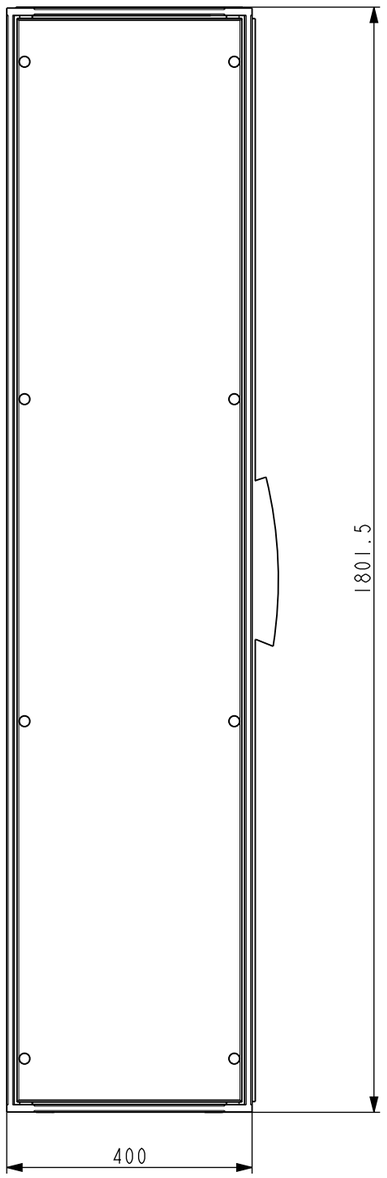

Schneider Electric

PV MCC ADVANCED

PV MCC ADVANCED

Number:	Revision:	Sheet:
EAV1361202	02	2/2

The information is highly confidential and is the exclusive property of Schneider Electric Group copyright reserved. This drawing must not be used for any purpose other than that expressly permitted in writing by the owners and must not be disclosed or reproduced in any way without permission from the owners in writing. This drawing must be returned to the owners when the purpose has ceased.

State: Under Promotion for Pilot Run
Printed on 2014/02/05

Original format A3