The technical information contained in this document is the exclusive property of Schneider Electric Industries S.A.S and cannot be used or disclosed to third parties in any form without its written consent. Only those drawings and diagrams certified for construction are to be used for building purposes. All devices shown in this diagram are in open position, drawn out with operating mechanism discharged and all power sources off.

Les informations techniques contenues dans ce document sont la propriété exclusive de Schneider Electric Industries S.A.S et ne peuvent être utilisées ou divulguées à des tiers quels qu'ils soient sans son accord écrit. Seuls nous engagent les documents certifiés conformes à la construction. Les appareils représentés sur ce schéma sont en position ouvert - désarmés - déchargés - toutes sources coupées.

DOE

ARMOIRES MONITORING

PTR

SCHEMA DE DETAIL

MONITORING
PHOTOVOLTAIQUE
CASINO LOT 5
PTR

| Ind Rev | Date Date | Modification / Modification | Nom / Name | Visa | Nom / Name | Visa | Nom / Name | Visa | Archiv. Micro-filmed |
|---|---|---|---|---|---|---|---|---|---|
| | | | Dessine / Drawn | | Verifie / Checked | | Approuve / Approved | | |
| 02 | 17/05/2013 | Mise à jour carte automate | BOUSSIN | | GUILLET | | VERY | | |
| 01 | 07/05/2013 | Mise à jour | BOUSSIN | | GUILLET | | VERY | | |
| 00 | 26/03/2013 | Edition originale / First issue | BOUSSIN | | GUILLET | | VERY | | |

Echelle / Scale: 1/1

Unite / Department: PEC

Code diffusion / Distribution code:

Projet - No commande / Project - Order No.: FR-7000166

ABE00014

Indice / Rev: 02

Folio / Sheet: 001

A3 garde - 11/2006

The technical information contained in this document is the exclusive property of Schneider Electric Industries S.A.S and cannot be used or disclosed to third parties of any kind without its written consent. Only those drawings and documents marked "for construction" are authorized for construction purposes. All devices shown in those drawings are in open position, drawn out with operating mechanism discharged and all power sources off.

Les informations techniques contenues dans ce document sont la propriété exclusive de Schneider Electric Industries S.A.S et ne peuvent être utilisées ou divulguées à des tiers quels qu'ils soient sans son accord écrit. Seuls nous engagent ceux qui portent la mention "pour construire". Les appareils représentés sur ce schéma sont en position ouvert - désarmés - déchargés - toutes sources coupées.


| Folio Sheet | Designation Designation | Indice de modification Revision | | | | | | | | | |
|---|---|---|---|---|---|---|---|---|---|---|---|
| 001 | PAGE DE GARDE | 00 | 01 | 02 | | | | | | | |
| 002 | PAGE RECAPITULATIVE / SUMMARY | 00 | 01 | 02 | | | | | | | |
| 010 | LISTE DES SYMBOLES | 00 | | | | | | | | | |
| 011 | LISTE DES SYMBOLES | 00 | | | | | | | | | |
| 012 | PRINCIPE DE REPERAGE | 00 | | | | | | | | | |
| 013 | REPERES ESSENTIELS - TABLE 1 - | 00 | | | | | | | | | |
| 014 | REPERAGE EMPLACEMENTS PHYSIQUES - TABLE 2 - | 00 | | | | | | | | | |
| 015 | REPERAGE DES MATERIELS - TABLE 3 - | 00 | | | | | | | | | |
| 019 | MARQUAGE | 00 | 01 | | | | | | | | |
| 020 | UNIFILAIRE | 00 | | | | | | | | | |
| 021 | UNIFILAIRE | 00 | 01 | | | | | | | | |
| 032 | ALIMENTATION 230VCA | 00 | | | | | | | | | |
| 033 | ALIMENTATION 24VCC | 00 | | | | | | | | | |
| 034 | DISTRIBUTION DES POLARITES 24VCC | 00 | | | | | | | | | |
| 035 | DISTRIBUTION DES POLARITES 24VCC | 00 | | | | | | | | | |
| 038 | COMMANDE ONDULEURS | 00 | | | | | | | | | |
| 040 | EXTENSEUR MODBUS RS485 24VCC | 00 | 01 | | | | | | | | |
| 041 | EXTENSEUR MODBUS RS485 24VCC | 00 | 01 | | | | | | | | |
| 042 | EXTENSEUR MODBUS RS485 24VCC | 00 | 01 | | | | | | | | |
| 044 | COFFRET OPTIQUE FIDJI V2 | 00 | | | | | | | | | |
| 045 | SWITCH ETHERNET | 00 | 01 | | | | | | | | |
| 050 | PC DE TELEGESTION | 00 | 01 | | | | | | | | |
| 052 | API NAPAC | 00 | 02 | | | | | | | | |
| 054 | CARTE 16 ENTREES TOR ENTREES 1 A 8 | 00 | 01 | | | | | | | | |
| 055 | CARTE 16 ENTREES TOR ENTREES 9 A 16 | 00 | 01 | | | | | | | | |
| 056 | CARTE 16 ENTREES TOR ENTREES 1 A 8 | 00 | 01 | | | | | | | | |
| 057 | CARTE 16 ENTREES TOR ENTREES 9 A 16 | 00 | | | | | | | | | |
| 058 | CARTE 4 ENTREES ANALOGIQUES UNIVERSELLES | 00 | | | | | | | | | |
| 059 | CARTE 4 SORTIES TOR RELAIS ELECTROMECANIQUES | 00 | | | | | | | | | |
| 060 | CARTE 4 SORTIES TOR RELAIS ELECTROMECANIQUES | 00 | 01 | | | | | | | | |
| 061 | CARTE 4 ENTREES TOR | 00 | 01 | 02 | | | | | | | |
| 150 | BORNIER : =N201+AP01-X1 | 00 | | | | | | | | | |
| 151 | BORNIER : =N201+AP01-X2 | 00 | | | | | | | | | |
| 152 | BORNIER : =N201+AP01-X3 | 00 | | | | | | | | | |
| 153 | BORNIER : =N201+AP01-X4 | 00 | | | | | | | | | |
| 154 | BORNIER : =N201+AP01-X021 | 00 | | | | | | | | | |
| 155 | BORNIER : =N201+AP01-X031 | 00 | | | | | | | | | |
| 156 | BORNIER : =N201+AP01-X041 | 00 | | | | | | | | | |
| 157 | BORNIER : =N201+AP01-X044 | 00 | | | | | | | | | |
| 200 | NOMENCLATURE / PART LIST | 00 | 01 | 02 | | | | | | | |
| 201 | NOMENCLATURE / PART LIST | 00 | 01 | 02 | | | | | | | |


Archivage
Microfilmed

PAGE RECAPITULATIVE / SUMMARY

MONITORING
PHOTOVOLTAIQUE
CASINO LOT 5
PTR

Schneider Electric

ABE00014

| Projet - No commande Project - Order No. | Indice Rev | Folio Sheet |
|---|---|---|
| FR-7000166 | 02 | 002 |

| SYMBOLE SYMBOL | CODE | LEGENDE DESCRIPTION | SYMBOLE SYMBOL | CODE | LEGENDE DESCRIPTION | SYMBOLE SYMBOL | CODE | LEGENDE DESCRIPTION |
|---|---|---|---|---|---|---|---|---|
| | | CONTACT A FERMETURE<br>MAKE CONTACT | | | DISPOSITIF D'ACCROCHAGE EN PRISE<br>DEVICE FOR RESTRICTING MOVEMENT BLOCKED POSITION | | G | ELEMENT DE PILE OU ACCUMULATEUR<br>PRIMARU CELL OR ACCUMULATOR |
| | | CONTACT A OUVERTURE<br>BREAK CONTACT | | | DISPOSITIF D'ACCROCHAGE LIBERE<br>DEVICE FOR RESTRICTING MOVEMENT UNBLOCKED POSITION | | | |
| | | CONTACT INVERSEUR<br>CHANGE OVER CONTACT | | | TERRE DE PROTECTION<br>EARTH PROTECTION | | H | LAMPE DE SIGNALISATION<br>SIGNAL LAMP |
| | | CONTACT NO TEMPORISE AU TRAVAIL<br>MAKE CONTACT DELAY WHEN OPERATING | | | TERRE FONCTIONNELLE<br>FUNCTIONNAL EARTH | | H | VOYANT MECANIQUE DE SIGNALISATION<br>MECHANICAL INDICATOR |
| | | CONTACT NF TEMPORISE AU TRAVAIL<br>BREAK CONTACT DELAY WHEN OPERATING | | | TERRE<br>EARTH | | H | AVERTISSEUR<br>HORN |
| | | CONTACT NO TEMPORISE AU REPOS<br>MAKE CONTACT DELAY WHEN RELEASING | P | B | COMMANDE PAR PRESSION<br>OPERATED BY PRESSURE | | H | SONNERIE<br>HORN |
| | | CONTACT NF TEMPORISE AU REPOS<br>MAKE CONTACT DELAY WHEN RELEASING | U | B | COMMANDE PAR TEMPERATURE<br>OPERATED BY TEMPERATURE | | | |
| | | CONTACT DE PASSAGE A LA FERMETURE<br>PASSING MAKE CONTACT CLOSING NOMENTARILY DURING OPERATION | h | B | COMMANDE PAR NIVEAU<br>OPERATED BY LEVEL | | KA | RELAIS - ORGANE DE COMMANDE<br>RELAY - COIL |
| | | CONTACT DE PASSAGE A L'OUVERTURE<br>PASSING BREAK CONTACT CLOSING NOMENTARILY DURING OPERATION | | | | | KA | RELAIS A MISE AU REPOS RETARDEE<br>SLOW RELEASING RELAY COIL |
| | | CONTACT A FERMETURE ANTERIEURE AUX AUTRES CONTACTS DE L'ENSEMBLE<br>MAKE CONTACT WICH OPERATES EARLIER RELATIVE TO THE ASSEMBLY OF CONTACT | | C | CAPACITE - CONDENSATEUR<br>CAPACITANCE - CAPACITOR | | KA | RELAIS A MISE AU TRAVAIL RETARDEE<br>SLOW OPERATING RELAY COIL |
| | | CONTACT A FERMETURE POSTERIEURE AUX AUTRES CONTACTS DE L'ENSEMBLE<br>MAKE CONTACT WICH OPERATES LATER RELATIVE TO THE ASSEMBLY OF CONTACT | | E | RESISTANCE DE CHAUFFAGE<br>HEATING RESISTOR | | KM | CONTACTEUR<br>CONTACTOR |
| | | CONTACT A OUVERTURE POSTERIEURE AUX AUTRES CONTACTS DE L'ENSEMBLE<br>BREAK CONTACT WICH OPERATES LATER RELATIVE TO THE ASSEMBLY OF CONTACT | | | | | | |
| | | CONTACT A OUVERTURE ANTERIEURE AUX AUTRES CONTACTS DE L'ENSEMBLE<br>MAKE CONTACT WICH OPERATES EARLIER RELATIVE TO THE ASSEMBLY OF CONTACT | | F | PARAFOUDRE<br>LIGHTNING ARRESTER | | P | INDICATEUR - SYMBOLE GENERAL<br>INDICATING INSTRUMENT - GENERAL SYMBOL |
| | | DISPOSITIF D'EMBROCHAGE<br>WITHDRAWABLE DEVICE | | F | COUPE CIRCUIT<br>FUSE | | P | ENREGISTREUR- SYMBOLE GENERAL<br>RECORDING INSTRUMENT - GENERAL SYMBOL |
| | | VERROUILLAGE MECANIQUE<br>MECHANICAL INTERLOCK | | F | DETECTION DE SURINTENSITE - EFFET THERMIQUE<br>OVERCURRENT DETECTION - THERMAL EFFECT | | P | COMPTEUR- SYMBOLE GENERAL<br>INTEGRATING METER - GENERAL SYMBOL |
| | | ENROULEMENT<br>WINDING | | F | DETECTION DE SURINTENSITE - EFFET MAGNETIQUE<br>OVERCURRENT DETECTION - MAGNETIC EFFECT | | | |

The technical information contained in this document is the exclusive property of Schneider Electric Industries S.A.S and cannot be used or disclosed to third parties of any kind without its written consent. Only those drawings and documents indicated in order form are contractual. All devices shown in the drawings are in open position, drawn out with operating mechanism discharged and all power sources off.

Les informations techniques contenues dans ce document sont la propriete exclusive de Schneider Electric Industries S.A.S et ne peuvent etre utilisees ou divulguees a des tiers quels qu'ils soient sans son accord ecrit. Seuls nous engagent les documents indiques a la commande. Les appareils sont representes sur ce schéma sont en position ouvert - désarmés - débrochés - toutes sources coupées.

| Ind. Rev | Date Date | Modification / Modification | Archiv. Micro-filmed | Ind. Rev | Date Date | Modification / Modification | Archiv. Micro-filmed |
|---|---|---|---|---|---|---|---|
| 00 | 26/03/2013 | Edition originale / First issue | | | | | |

LISTE DES SYMBOLES

MONITORING
PHOTOVOLTAIQUE
CASINO LOT 5
PTR

Schneider Electric

ABE00014

| Projet - No commande Project - Order No. | Indice Rev | Folio Sheet |
|---|---|---|
| FR-7000166 | 00 | 010 |

A3 suite - 11/2006

| SYMBOLE SYMBOL | CODE | LEGENDE DESCRIPTION | SYMBOLE SYMBOL | CODE | LEGENDE DESCRIPTION | SYMBOLE SYMBOL | CODE | LEGENDE DESCRIPTION |
|---|---|---|---|---|---|---|---|---|
| | Q | INTERRUPTEUR<br>SWITCH | | S | COMMANDE PAR LEVIER<br>OPERATED BY LEVER | | U | CONVERTISSEUR<br>TRANSDUCER |
| | Q | DISJONCTEUR<br>CIRCUIT BREAKER | | S | COMMANDE PAR CLEF<br>OPERATED BY KEY | | | |
| | Q | SECTIONNEUR<br>DISCONNECTOR (ISOLATOR) | | S | TL OU TPL POUR SECTIONNEUR<br>DISCREPANCY SWITCH FOR DISCONNECTOR | | V | FONCTION REDRESSEUSE<br>RECTIFYING FUNCTION |
| | Q | INTERRUPTEUR SECTIONNEUR<br>SWITCH DISCONNECTOR | | S | TL OU TPL POUR DISJONTEUR<br>DISCREPANCY SWITCH FOR CB | | | |
| | Q | COMMANDE PAR MOTEUR<br>OPERATED BY MOTOR | | S | BOITIER DE SIGNALISATION<br>ALARM ANNUNCIATOR | | | |
| | | | | | | | | |
| | R | SHUNT<br>SHUNT | | T | TRANSFORMATEUR DE COURANT UNIIFILAIRE<br>CURRENT TRANSFORMER SLD | | X | BOITE D'ESSAI<br>TEST BLOCK |
| | R | RESISTANCE<br>RESISTOR | | T | TRANSFORMATEUR DE COURANT MULTIFILAIRE<br>CURRENT TRANSFORMER TRIPOLAR DRAWING | | X | BORNE SIMPLE<br>ORDINARY TERMINAL BLOCK |
| | | | | T | TRANSFORMATEUR DE TENSION MULTIFILAIRE<br>VOLTAGE TRANSFORMER TRIPOLAR DRAWING | | X | BORNE SECTIONABLE<br>INTERRUPTIBLE TERMINAL BLOCK |
| | S | CONTACT DE POSITION NO<br>MAKE CONTACT OF LIMIT SWITCH | | T | ENROULEMENT DE TRANFORMATEUR DE PUISSANCE - MULTIFILAIRE<br>POWER TRANSFORMER WINDING - TRIPOLAR DRAWING | | X | BORNE FUSIBLE<br>FUSE CARIER TERMINAL BLOCK |
| | S | CONTACT DE POSITION NF<br>BREAK CONTACT OF LIMIT SWITCH | | T | ENROULEMENT DE TRANFORMATEUR DE PUISSANCE - MULTIFILAIRE<br>POWER TRANSFORMER WINDING - TRIPOLAR DRAWING | | X | BORNE DIODE<br>DIODE TERMINAL BLOCK |
| | S | COMMUTATEUR UNIPOLAIRE A N DIRECTIONS<br>SINGLE POLE N POSITIONS SWITCH | | T | TRANFORMATEUR DE PUISSANCE - UNIFILAIRE<br>POWER TRANSFORMER - SLD | | X | BORNE RESISTANCE<br>RESISTOR TERMINAL BLOCK |
| | S | COMMANDE PAR POUSSOIR<br>OPERATED BY PUSHING | | T | AUTOTRANFORMATEUR DE PUISSANCE - UNIFILAIRE<br>POWER AUTOTRANSFORMER WINDING - SLD | | X | BROCHE MALE DE CONNECTEUR<br>MAL CONNECTOR PIN |
| | S | COMMANDE PAR TIRETTE<br>OPERATED BY PULLING | | T | TRANSFORMATEUR D'ISOLEMENT<br>ISOLATING TRANSFORMER | | X | BROCHE FEMELLE DE CONNECTEUR<br>FEMALE CONNECTOR PIN |
| | S | COMMANDE ROTATIVE<br>OPERATED BY TURNING | | | | | | |
| | S | BOUTON POUSSOIR COUP DE POING<br>EMERGENCY SWITCH | | | | | | |

The technical information contained in this document is the exclusive property of Schneider Electric Industries S.A.S and cannot be used or disclosed to third parties of any kind without its written consent. Only those drawings and diagrams certified and signed by Schneider Electric are valid. All devices shown in the diagrams are in open position, drawn out with operating mechanism discharged and all power sources off.

Les informations techniques contenues dans ce document sont la propriete exclusive de Schneider Electric Industries S.A.S et ne peuvent etre utilisees ou divulguees a des tiers quels qu'ils soient sans son accord ecrit. Seuls nous engagent les plans ayant ete certifies et signes par Schneider Electric. Les appareils representes sur ce schéma sont en position ouvert - désarmés - débrochés - toutes sources coupées.

| Ind. Rev | Date Date | Modification / Modification | Archiv. Micro-filmed | Ind. Rev | Date Date | Modification / Modification | Archiv. Micro-filmed |
|---|---|---|---|---|---|---|---|
| 00 | 26/03/2013 | Edition originale / First issue | | | | | |

LISTE DES SYMBOLES

MONITORING
PHOTOVOLTAIQUE
CASINO LOT 5
PTR

Schneider Electric

ABE00014

| Projet - No commande<br>Project - Order No. | Indice<br>Rev | Folio<br>Sheet |
|---|---|---|
| FR-7000166 | 00 | 011 |

A3 suite - 11/2006

## LE REPERAGE DES APPAREILS EST CONFORME A LA NORME CEI. ADDITION DE 4 BLOCS DE CARACTERES

| = ANN | + AANN | - AA*N*N | : CC*C* |
|---|---|---|---|
| bloc 1* | bloc 2 | bloc 3 | bloc 4 |

A = Alphabétique
N = Numérique
C = Alphanumérique
* = facultatif

Ex : =D01 +AB01 -KA1 :13

- :13 — repère du N° de borne
- -KA1 — repère du matériel (racine et n° d'ordre)
- +AB01 — repère de l'emplacement physiquel (zone ; localisation)
- =D01 — repère essentiel (ensemble ou fonction)

**bloc 1 =ANN** "=" symbole distinctif **repère essentiel**

Repère principal caractérisant chaque subdivision importante d'une installation ou ensemble (fonctionnel). Il est facultatif.
Le 1° caractère est choisi dans la "TABLE 1.
Cette table donne les lettres repères des niveaux de tension et des fonctions non spécifiques à une travée ou un niveau de tension.

**bloc 2 +AANN** "+" symbole distinctif **repère de l'emplacement physique**

Repère de l'adresse physique du matériel.
Repère de l'équipement qui contient le matériel (choix des deux premiers caractères dans la "TABLE 2").

**bloc 3 -AA*N*N** "-" symbole distinctif **repère matériel**

Repère complet du nom de l'appareil. La première lettre indique la fonction générale de l'appareil. Choix "TABLE 3".

**bloc 4 :CC*C*** ":" symbole distinctif **repère du N° de borne**

Repère composé indifféremment de lettres ou de chiffres.

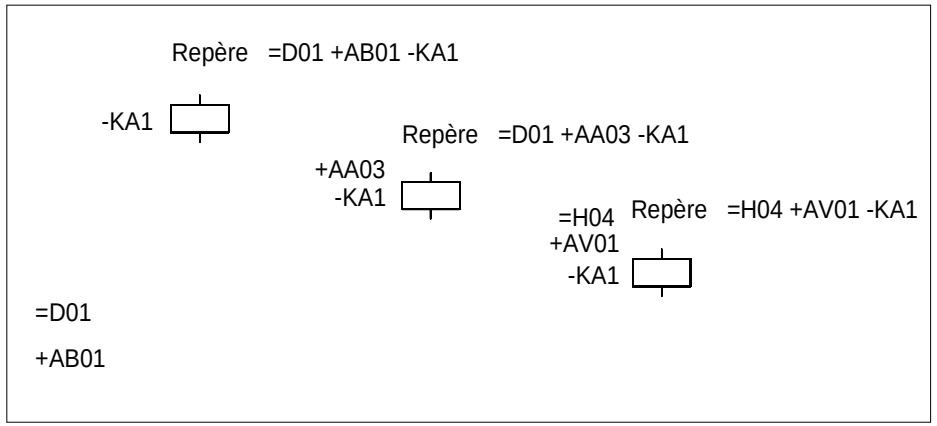


## ACCORDING TO STANDARD, MARKING OF EQUIPMENTS IS MADE WITH 4 BLOCKS OF CHARACTERS

| = ANN | + AANN | - AA*N*N | : CC*C* |
|---|---|---|---|
| block 1* | block 2 | block 3 | block 4 |

A = Alphabetic
N = Numeric
C = Alphanumeric
* = optional

Ex : =D01 +AB01 -KA1 :13

- :13 — terminal designation
- -KA1 — identification of item (root & sequence N°)
- +AB01 — location of item (zone ; location)
- =D01 — higher-level designation (set or function)

**block 1 =ANN** "=" distinctive symbol **higher level designation**

Item designation for any major part of plant or function. Optional.
First character is given by "TABLE 1".
This table gives codes for voltage levels and for no attached functions to a particular bay or voltage level.

**block 2 +AANN** "+" distinctive symbol **location of item**

Designation for location item.
Indicates equipment wich conttains the item (choice of the 2 first characters "TABLE 2").

**block 3 -AA*N*N** "-" distinctive symbol **identification of item**

Complete designation of item identification. 1st character indicates general function of item. Choice "TABLE 3".

**block 4 :CC*C*** ":" distinctive symbol **terminal designation**

Designation composed of letters or numbers.

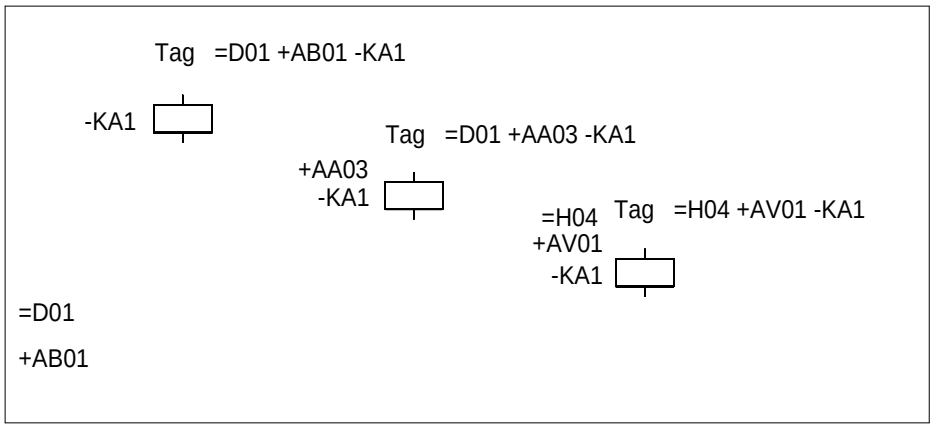


The technical information contained in this document is the exclusive property of Schneider Electric Industries S.A.S and cannot be used or disclosed to third parties of any kind without its written consent. Only those drawings and documents specifically approved for construction are to be used. All power sources must be off and those are in open position, drawn out with operating mechanism discharged and all power sources off.

Les informations techniques contenues dans ce document sont la propriete exclusive de Schneider Electric Industries S.A.S et ne peuvent etre utilisees ou divulguees a des tiers quels qu'ils soient sans son accord ecrit. Seuls nous engagent les documents ou plans specifiquement approuves pour la construction. Les sources doivent etre coupees et les appareils de coupure sur ce schéma sont en position ouvert - désarmés - débrochés - toutes sources coupées.

| Ind. Rev | Date Date | Modification / Modification | Archiv. Micro-filmed | Ind. Rev | Date Date | Modification / Modification | Archiv. Micro-filmed |
|---|---|---|---|---|---|---|---|
| 00 | 26/03/2013 | Edition originale / First issue | | | | | |

PRINCIPE DE REPERAGE

MONITORING
PHOTOVOLTAIQUE
CASINO LOT 5
PTR

Schneider Electric

ABE00014

| Projet - No commande / Project - Order No. | Indice Rev | Folio Sheet |
|---|---|---|
| FR-7000166 | 00 | 012 |

A3 suite - 11/2006

The technical information contained in this document is the exclusive property of Schneider Electric Industries S.A.S and cannot be used or disclosed to third parties of any kind without its written consent. Only those drawings and documents signed and dated by Schneider Electric are binding and represent the contractual commitments. Drawings are in open position, drawn out with Operating mechanism discharged and all power sources off.

Les informations techniques contenues dans ce document sont la propriete exclusive de Schneider Electric Industries S.A.S et ne peuvent etre utilisees ou divulguees a des tiers quels qu'ils soient sans son accord ecrit. Seuls nous engagent les documents revetus de la date et signes par Schneider Electric. Les dessins sont en position ouvert - desarmes - toutes sources coupees.

## NIVEAUX DE TENSION

| LETTRES | TENSIONS |
|---|---|
| B | > 420kV |
| C | 380 à 419kV |
| D | 220 à 379kV |
| E | 110 à 219kV |
| F | 60 à 109kV |
| G | 45 à 59kV |
| H | 30 à 44kV |
| J | 20 à 29kV |
| K | 10 à 19kV |
| L | 6 à 9kV |
| M | 1 à 5kV |
| N0 | 500 - 999VCA |
| N1 | 300 - 499VCA |
| N2 | 50 - 299VCA |
| N3 | < 49VCA |
| N5 | > 250VCC |
| N6 | 150 - 249VCC |
| N7 | 50 - 149VCC |
| N8 | 25 - 49VCC |
| N9 | < 24VCC |

## FONCTIONS NON SPECIFIQUES A UNE TRAVEE OU A UN NIVEAU DE TENSION

| LETTRES | FONCTIONS |
|---|---|
| Q | MESURE - COMPTAGE - ENREGISTREMENT |
| R | PROTECTIONS |
| S | ECLAIRAGE - CLIMATISATION - INSTAL DOMESTIQUE |
| T | TRANSFORMATEUR |
| U | COMMUNS - TRANCHE GENERALE |
| V | |
| W | INTERFACES |
| X | CONSIGNATEURS - OSCILLOPERTURBOGRAPHE |
| Y | SYSTEME TELECOMMUNICATION |
| Z | CABLE |

Le numéro de la travée est donné par deux chiffres caractéristiques de 01 à 99.
Les chiffres "00" sont utilisés pour les équipements communs à un niveau de tension et plusieurs travées.

ex : =E00, repère essentiel de l'ensemble fonctionnel commun à toutes les travées 132kV.
+E00.AB01, armoire de relayage N°1 (protection bar re)

EXEMPLES : +E04 Indique que l'emplacement appartient en totalité à la travée 110kV N°04
=C05 Indique la travée 400kV N°05
=R01 Indique l'ensemble fonctionnel "PROTECTION INCENDIE" N°01

## LEVEL VOLTAGE

| LETTRES | VOLTAGE |
|---|---|
| B | > 420kV |
| C | 380 à 419kV |
| D | 220 à 379kV |
| E | 110 à 219kV |
| F | 60 à 109kV |
| G | 45 à 59kV |
| H | 30 à 44kV |
| J | 20 à 29kV |
| K | 10 à 19kV |
| L | 6 à 9kV |
| M | 1 à 5kV |
| N0 | 500 - 999VAC |
| N1 | 300 - 499VAC |
| N2 | 50 - 299VAC |
| N3 | < 49VAC |
| N5 | > 250VDC |
| N6 | 150 - 249VDC |
| N7 | 50 - 149VDC |
| N8 | 25 - 49VDC |
| N9 | < 24VDC |

## NO ATTACHED FUNCTIONS TO A PARTICULAR BAY OR A VOLTAGE LEVEL

| LETTRES | VOLTAGE |
|---|---|
| Q | MEASURING - RECORDING - METERING |
| R | PROTECTIONS |
| S | LIGHTING, AIR CONDITIONING, DOMESTIC |
| T | TRANSFORMER |
| U | COMMONS |
| V | |
| W | INTERFACES |
| X | EVENTS & FAULT RECORDER, SUPERVISION |
| Y | TELECOMMUNICATION SYSTEM, ALARMS STATUS |
| Z | CABLE |

Bay number is given by two figures from 01 to 99.
Figures "00" are used for common equipment to a voltage level and several bays

eg ; =E00, higher level of designation 132kV busbar
+E00, AB01, 132kV common relaying cubicle N°1 (bus bar protection)

EXAMPLES : +E04 Indicates that the localisation is fully attached to bay 110kV N°04
=C05 Indicates bay 400kV N°05
=R01 Indicates the function "FIRE PROTECTION" N° 01

| Ind. Rev | Date Date | Modification / Modification | Archiv. Micro-filmed | Ind. Rev | Date Date | Modification / Modification | Archiv. Micro-filmed |
|---|---|---|---|---|---|---|---|
| 00 | 26/03/2013 | Edition originale / First issue | | | | | |

REPERES ESSENTIELS
- TABLE 1 -

MONITORING
PHOTOVOLTAIQUE
CASINO LOT 5
PTR

Schneider Electric

ABE00014

| Projet - No commande / Project - Order No. | Indice / Rev | Folio / Sheet |
|---|---|---|
| FR-7000166 | 00 | 013 |

A3 suite - 11/2006

| CODE | DESIGNATION |
|---|---|
| | |
| | |
| AC | Tableau de commande et protection<br>Control and relay board |
| AD | Tableau de comptage - mesure<br>Metering - Measuring board |
| AE | Armoire enregistreur de pertubations<br>Fault recorder cubicle |
| AF | Armoire de travée<br>Marshalling kiosk |
| AG | Coffret intensité<br>Current box |
| AH | Coffret tension<br>Voltage box |
| AJ | Armoire - coffret d'éclairage<br>Lighting cubicle - box |
| | |
| AL | Armoire monitoring de livraison (PDL)<br>Monitoring delivery board (PDL) |
| AM | Coffret auxiliaires transformateur<br>Transformer auxiliaries box |
| AN | Coffret régleur transformateur<br>On load tap changer box |
| AO | Armoire / coffret synchro<br>Synchro panel |
| AP | Armoire monitoring de transformation (PTR)<br>Monitoring transformer board (PTR) |

| CODE | DESIGNATION |
|---|---|
| AQ | Armoire contrôle et régulation tension du transformateur<br>Transformer auto voltage regulation cubicle |
| AS | Armoire auxiliaires courant alternatif<br>AC low voltage auxiliaries cubicle |
| AT | Armoire auxiliaires courant continu<br>DC low voltage auxiliaries cubicle |
| AU | Armoire auxiliaires groupe de secours<br>Emergency generator auxiliaries cubicle |
| AV | Caisson-coffret BT des cellules MT<br>MV SWGR low voltage cubicle-box |
| AW | Armoire des auxiliaires disjoncteur<br>Circuit breaker auxiliaries cubicle |
| AX | Armoire des auxiliaires sectionneur<br>Disconnecting switch auxiliaries cubicle |
| | |
| | |
| | |
| | |
| | |
| | |
| | |
| | |

The technical information contained in this document is the exclusive property of Schneider Electric Industries S.A.S and cannot be used or disclosed to third parties of any kind without its written consent. Only those drawings and diagrams marked "approved for construction" or "approved for execution" are to be used for construction purposes. All devices shown in the drawings are in open position, drawn out with operating mechanism discharged and all power sources off.

Les informations techniques contenues dans ce document sont la propriete exclusive de Schneider Electric Industries S.A.S et ne peuvent etre utilisees ou divulguees a des tiers quels qu'ils soient sans son accord ecrit. Seuls nous engagent les plans portant la mention "bon pour execution". Les appareils montrés sur les schémas sont en position ouvert - désarmés - débrochés - toutes sources coupées.

| Ind. Rev | Date Date | Modification / Modification | Archiv. Micro-filmed | Ind. Rev | Date Date | Modification / Modification | Archiv. Micro-filmed |
|---|---|---|---|---|---|---|---|
| 00 | 26/03/2013 | Edition originale / First issue | | | | | |

REPERAGE EMPLACEMENTS PHYSIQUES
- TABLE 2 -

MONITORING
PHOTOVOLTAIQUE
CASINO LOT 5
PTR

Schneider Electric

ABE00014

| Projet - No commande<br>Project - Order No. | Indice<br>Rev | Folio<br>Sheet |
|---|---|---|
| FR-7000166 | 00 | 014 |

| CODE | DESIGNATION - (Famille de symbole) / (Family of symbol) |
|---|---|
| A | Ensemble, Sous-ensemble - (démarreur de moteur, automates)<br>Assemblie, Subassemblie - (motor starter, programmable logic device) |
| B | Transducteur de grandeur non électrique en grandeur électrique - (détecteur, capteur)<br>Transducer from non electrical to electrical quantity - (detector, sensor) |
| C | Condensateur<br>Capacitor |
| D | Operateur binaire, Mise en mémoire, Temporisation<br>Binary operator, Storage device delay, Delay device |
| E | Matériel divers - (chauffage, éclairage, divers)<br>Miscellaneous - (heating, lighting, various) |
| F | Dispositif de protection - (fusible, protection, relais thermique & magnétique, relais de mesure)<br>Protective device - (fuse, thermal & magnetic relay, measuring relay) |
| G | Générateur, Alimentation de puissance - (générateur, batterie)<br>Generator, Power supply - (generator, battery) |
| H | Dispositif de signalisation - (signalisation)<br>Signalling device - (signalling) |
| KA | Relais, Contacteur - (relais auxiliaire, contact)<br>Relay, Contactor - (auxiliairy relay, contact) |
| KM | Relais, Contacteur - (contacteur de puissance, contact)<br>Relay, Contactor - (power contactor, contact) |
| L | Reactance - (inductance)<br>Reactor - (inductance) |
| M | Moteur<br>Motor |
| N | Dispositif analogique-numérique<br>Analogue digital device |
| P | Instruments de mesure - (appareil de mesure, indicateur, enregistreur)<br>Measuring equipment - (measuring instrument) |
| Q | Appareil de connexion pour circuit de puissance - (disjoncteur, interrupteur, sectionneur, contacteur disj)<br>Switching device for power circuit - (circuit breaker,switch, disconnector,circuit breaker contactor) |

| CODE | DESIGNATION - (Famille de symbole) / (Family of symbol) |
|---|---|
| R | Résistance - (résistance, shunt)<br>Resistor - (resistor, shunt) |
| S | Appareil de connexion pour circuit de conduite, Selecteur - (bouton, commutateur,fin de course)<br>Switching device for control, Circuit-selector - (button, turn switch, limit switch) |
| T | Transformateur<br>Transformer |
| U | Transducteur, Convertisseur<br>Transducer, Converter |
| V | Semiconducteur<br>Semiconductor |
| W | Conducteur - Câble<br>Conductor - Cable |
| X | Bornes - (prise de courant, répartiteur, borne)<br>Terminals - (plug-in soket, distributor, terminal) |
| Y | Appareil mécanique actionné électriquement - (frein, électrovane)<br>Electrical operated mechanical device - (brake, electrovalve) |
| Z | Régulateur, Filtre, Correcteur<br>Regulator, Filter, Compandor |
| | |
| | |
| | |
| | |
| | |
| | |

The technical information contained in this document is the exclusive property of Schneider Electric Industries S.A.S and cannot be used or disclosed to third parties of any kind without its written consent. Only those drawings and diagrams certified for construction are approved for production. All devices shown in the drawings are in open position, drawn out with operating mechanism discharged and all power sources off.

Les informations techniques contenues dans ce document sont la propriete exclusive de Schneider Electric Industries S.A.S et ne peuvent etre utilisees ou divulguees a des tiers quels qu'ils soient sans son accord ecrit. Seuls nous engagent les plans certifiés pour la fabrication. Les appareils sont representés sur ce schéma sont en position ouvert - désarmés - débrochés - toutes sources coupées.

| Ind. Rev | Date Date | Modification / Modification | Archiv. Micro-filmed | Ind. Rev | Date Date | Modification / Modification | Archiv. Micro-filmed |
|---|---|---|---|---|---|---|---|
| 00 | 26/03/2013 | Edition originale / First issue | | | | | |

REPERAGE DES MATERIELS
- TABLE 3 -

MONITORING
PHOTOVOLTAIQUE
CASINO LOT 5
PTR

Schneider Electric

ABE00014

Projet - No commande / Project - Order No.: FR-7000166

Indice Rev: 00

Folio Sheet: 015

A3 suite - 11/2006

ETIQUETTE COLLEE A L'INTERIEUR DE L'ARMOIRE
EN HAUT SUR LE FLANC GAUCHE

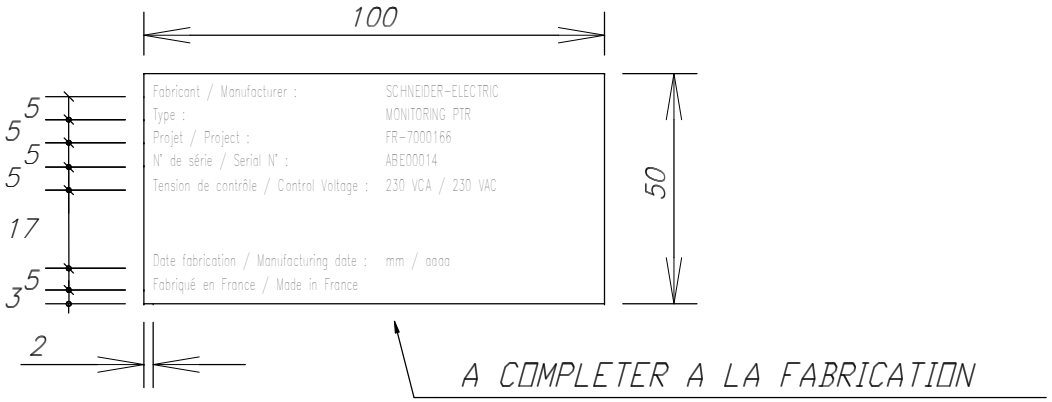


PLAQUE DILOPHANE GRAVEE AUTO-ADHESIVE

ECRITURE NOIRE SUR FOND BLANC

HAUTEUR DES LETTRES : 2.5 mm

CARACTERES : HELVETICA-NARROW

The technical information contained in this document is the exclusive property of Schneider Electric Industries S.A.S and cannot be used or disclosed to third parties of any kind without its written consent. Only those drawings and documents marked "for construction" are provided for construction. All devices shown in the drawings are in open position, drawn out with operating mechanism discharged and all power sources off.

Les informations techniques contenues dans ce document sont la propriete exclusive de Schneider Electric Industries S.A.S et ne peuvent être utilisées ou divulguées à des tiers quels qu'ils soient sans son accord écrit. Seuls nous engagent les plans portant la mention "pour construction". Les appareils représentés sur ce schéma sont en position ouvert - désarmés - débrochés - toutes sources coupées.

| Ind. Rev | Date Date | Modification / Modification | Archiv. Micro-filmed | Ind. Rev | Date Date | Modification / Modification | Archiv. Micro-filmed |
|---|---|---|---|---|---|---|---|
| 01 | 07/05/2013 | Mise à jour | | | | | |
| 00 | 26/03/2013 | Edition originale / First issue | | | | | |

MARQUAGE

MONITORING
PHOTOVOLTAIQUE
CASINO LOT 5
PTR

Schneider Electric

ABE00014

| Projet - No commande / Project - Order No. | Indice Rev | Folio Sheet |
|---|---|---|
| FR-7000166 | 01 | 019 |

A3 suite - 11/2006

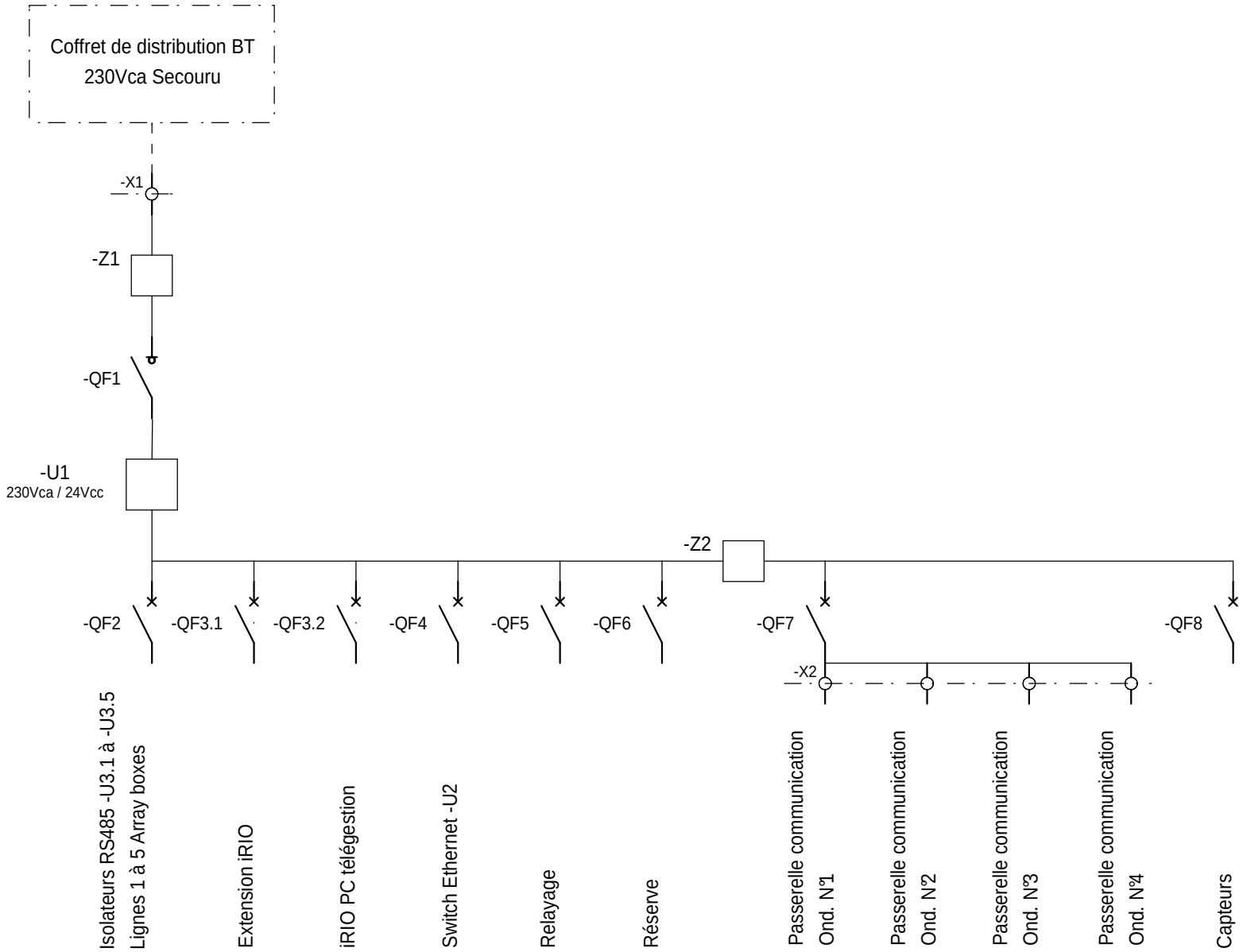


The technical information contained in this document is the exclusive property of Schneider Electric Industries S.A.S and cannot be used or disclosed to third parties of any kind without its written consent. Only those drawings and diagrams certified for construction by an authorized Schneider Electric representative are valid. All devices shown in the drawings are in open position, drawn out with operating mechanism discharged and all power sources off.

Les informations techniques contenues dans ce document sont la propriete exclusive de Schneider Electric Industries S.A.S et ne peuvent etre utilisees ou divulguees a des tiers quels qu'ils soient sans son accord ecrit. Seuls nous engagent les plans certifies pour construction par un representant de Schneider Electric. Les appareils representes sur ce schéma sont en position ouvert - désarmés - débrochés - toutes sources coupées.

| Ind. Rev | Date Date | Modification / Modification | Archiv. Micro-filmed | Ind. Rev | Date Date | Modification / Modification | Archiv. Micro-filmed |
|---|---|---|---|---|---|---|---|
| 00 | 26/03/2013 | Edition originale / First issue | | | | | |

UNIFILAIRE

MONITORING
PHOTOVOLTAIQUE
CASINO LOT 5
PTR

Schneider Electric

ABE00014

| Projet - No commande / Project - Order No. | Indice / Rev | Folio / Sheet |
|---|---|---|
| FR-7000166 | 00 | 020 |

A3 suite - 11/2006

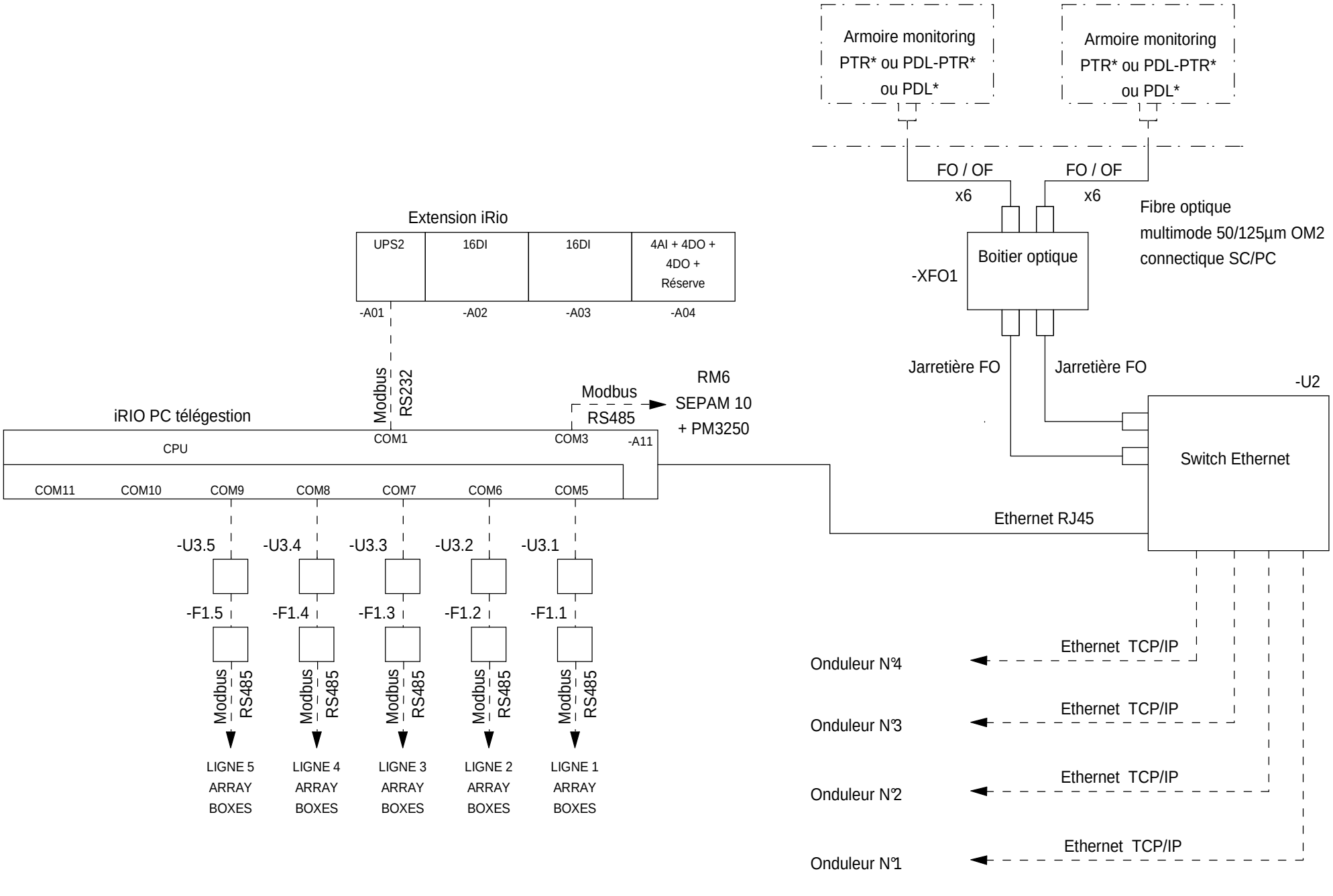


The technical information contained in this document is the exclusive property of Schneider Electric Industries S.A.S and cannot be used or disclosed to third parties of any kind without its written consent. Only those drawings and documents marked "Approved for construction" are to be used for the purpose of construction. All devices shown in the drawings are in open position, drawn out with operating mechanism discharged and all power sources off.

Les informations techniques contenues dans ce document sont la propriete exclusive de Schneider Electric Industries S.A.S et ne peuvent etre utilisees ou divulguees a des tiers quels qu'ils soient sans son accord ecrit. Seuls nous engagent les plans portant la mention "Approuve pour construction". Les appareils representes sur ce schéma sont en position ouvert - désarmés - débrochés - toutes sources coupées.

| Ind. Rev | Date Date | Modification / Modification | Archiv. Micro-filmed | Ind. Rev | Date Date | Modification / Modification | Archiv. Micro-filmed |
|---|---|---|---|---|---|---|---|
| 01 | 07/05/2013 | Mise à jour | | | | | |
| 00 | 26/03/2013 | Edition originale / First issue | | | | | |

UNIFILAIRE

MONITORING
PHOTOVOLTAIQUE
CASINO LOT 5
PTR

Schneider Electric

ABE00014

| Projet - No commande / Project - Order No. | Indice Rev | Folio Sheet |
|---|---|---|
| FR-7000166 | 01 | 021 |

A3 suite - 11/2006

Coffret de distribution BT

230Vca Secouru

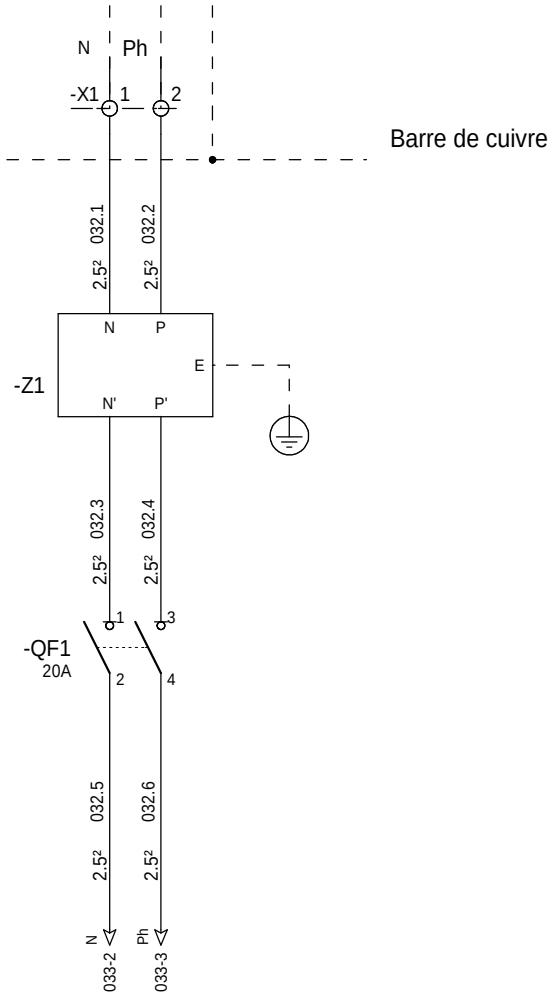


=N201

+AP01

The technical information contained in this document is the exclusive property of Schneider Electric Industries S.A.S and cannot be used or disclosed to third parties of any kind without its written consent. Only those drawings and documents marked "for construction" or "approved" may be used for construction purposes. Drawings must be used only when are in open position, drawn out with operating mechanism discharged and all power sources off.

Les informations techniques contenues dans ce document sont la propriete exclusive de Schneider Electric Industries S.A.S et ne peuvent etre utilisees ou divulguees a des tiers quels qu'ils soient sans son accord ecrit. Seuls nous engagent les documents marqués "pour construire" ou "approuvé". Les documents ne doivent etre utilisés que sur ce schéma sont en position ouvert - désarmés - débrochés - toutes sources coupées.

| Ind. Rev | Date Date | Modification / Modification | Archiv. Micro-filmed | Ind. Rev | Date Date | Modification / Modification | Archiv. Micro-filmed |
|---|---|---|---|---|---|---|---|
| 00 | 26/03/2013 | Edition originale / First issue | | | | | |

ALIMENTATION 230VCA

MONITORING
PHOTOVOLTAIQUE
CASINO LOT 5
PTR

Schneider Electric

ABE00014

| Projet - No commande / Project - Order No. | Indice / Rev | Folio / Sheet |
|---|---|---|
| FR-7000166 | 00 | 032 |

A3 suite - 01/2008

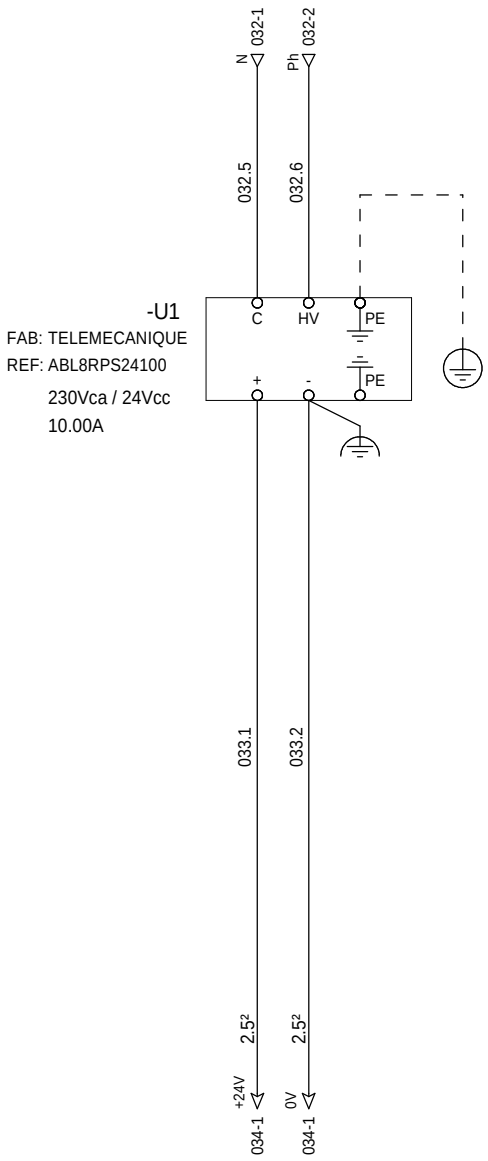


=N201
+AP01

The technical information contained in this document is the exclusive property of Schneider Electric Industries S.A.S and cannot be used or disclosed to third parties of any kind without its written consent. Only those drawings and documents marked "for construction" or "approved for construction" may be used for the purpose of building equipment. All devices shown in the drawings are in open position, drawn out with operating mechanism discharged and all power sources off.

Les informations techniques contenues dans ce document sont la propriete exclusive de Schneider Electric Industries S.A.S et ne peuvent etre utilisees ou divulguees a des tiers quels qu'ils soient sans son accord ecrit. Seuls nous engagent ceux qui portent la mention "bon pour construire". Les appareils montres dans les dessins sont en position ouvert - desarmes - debrochés - toutes sources coupées.

| | | | | | | | | |
|---|---|---|---|---|---|---|---|---|
| 00 | 26/03/2013 | Edition originale / First issue | | | | | | |
| Ind. Rev | Date Date | Modification / Modification | Archiv. Micro-filmed | Ind. Rev | Date Date | Modification / Modification | Archiv. Micro-filmed | |

ALIMENTATION 24VCC

MONITORING
PHOTOVOLTAIQUE
CASINO LOT 5
PTR

Schneider Electric

ABE00014

| Projet - No commande / Project - Order No. | Indice / Rev | Folio / Sheet |
|---|---|---|
| FR-7000166 | 00 | 033 |

A3 suite - 01/2008

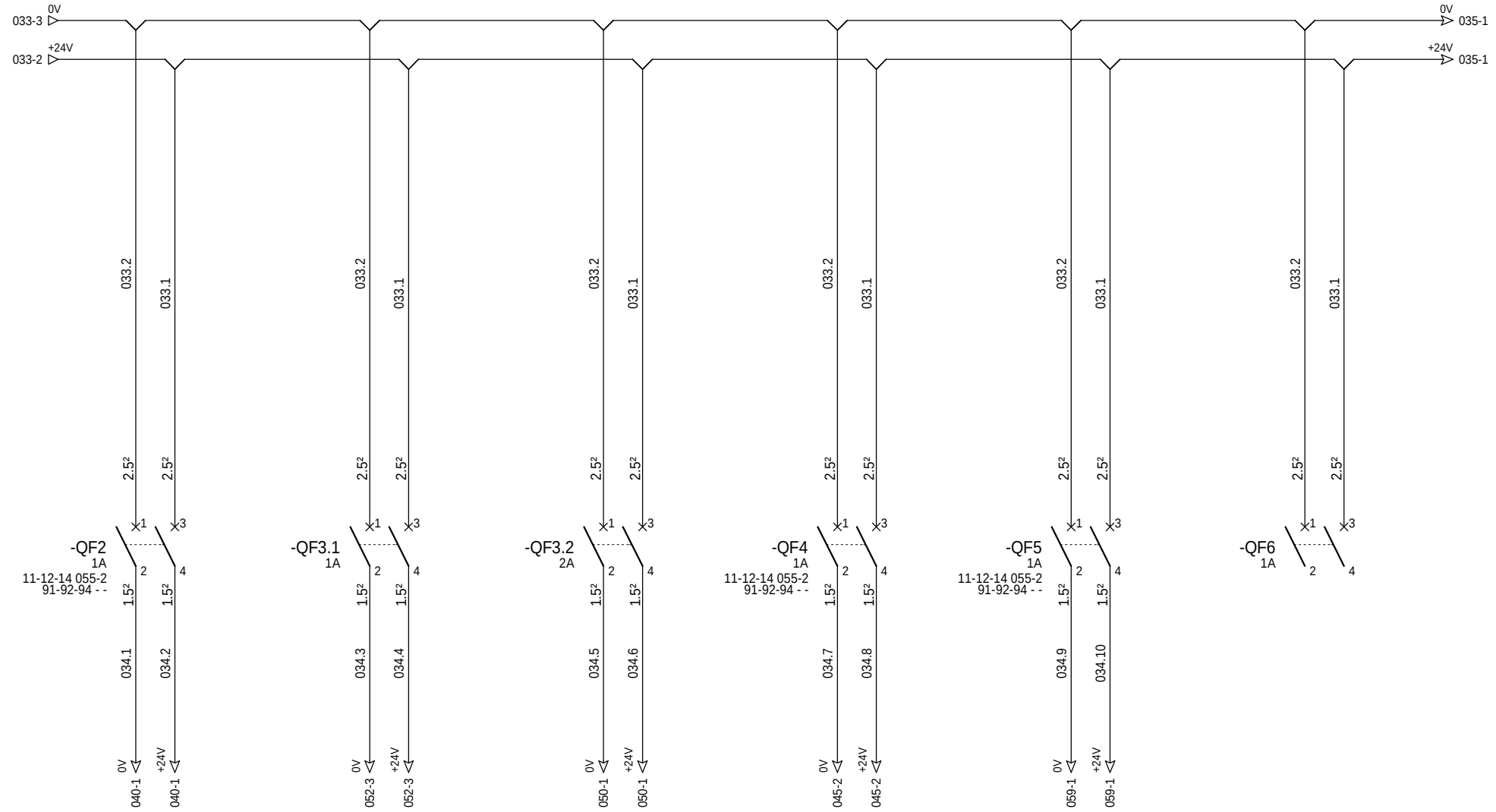


Isolateurs RS485 -U3.1 à -U3.5
Lignes 1 à 5 Array boxes

Alimentation 24Vcc
Extension iRIO

Alimentation 24Vcc
iRIO PC télégestion

Alimentation 24Vcc
Switch Ethernet -U2

Alimentation 24Vcc
Relayage

Réserve

=N201
+AP01

The technical information contained in this document is the exclusive property of Schneider Electric Industries S.A.S and cannot be used or disclosed to third parties of any kind without its written consent. Only those drawings and diagrams certified directed for construction, assembly or operation are to be used. All devices shown in the diagrams are in open position, drawn out with operating mechanism discharged and all power sources off.

Les informations techniques contenues dans ce document sont la propriete exclusive de Schneider Electric Industries S.A.S et ne peuvent etre utilisees ou divulguees a des tiers quels qu'ils soient sans son accord ecrit. Seuls nous engagent les plans portant la mention "bon pour construire". Les appareils figurant sur ce schéma sont en position ouvert - désarmés - débrochés - toutes sources coupées.

| Ind. Rev | Date Date | Modification / Modification | Archiv. Micro-filmed | Ind. Rev | Date Date | Modification / Modification | Archiv. Micro-filmed |
|---|---|---|---|---|---|---|---|
| 00 | 26/03/2013 | Edition originale / First issue | | | | | |

DISTRIBUTION DES POLARITES 24VCC

MONITORING
PHOTOVOLTAIQUE
CASINO LOT 5
PTR

Schneider Electric

ABE00014

| Projet - No commande / Project - Order No. | Indice Rev | Folio Sheet |
|---|---|---|
| FR-7000166 | 00 | 034 |

A3 suite - 01/2008

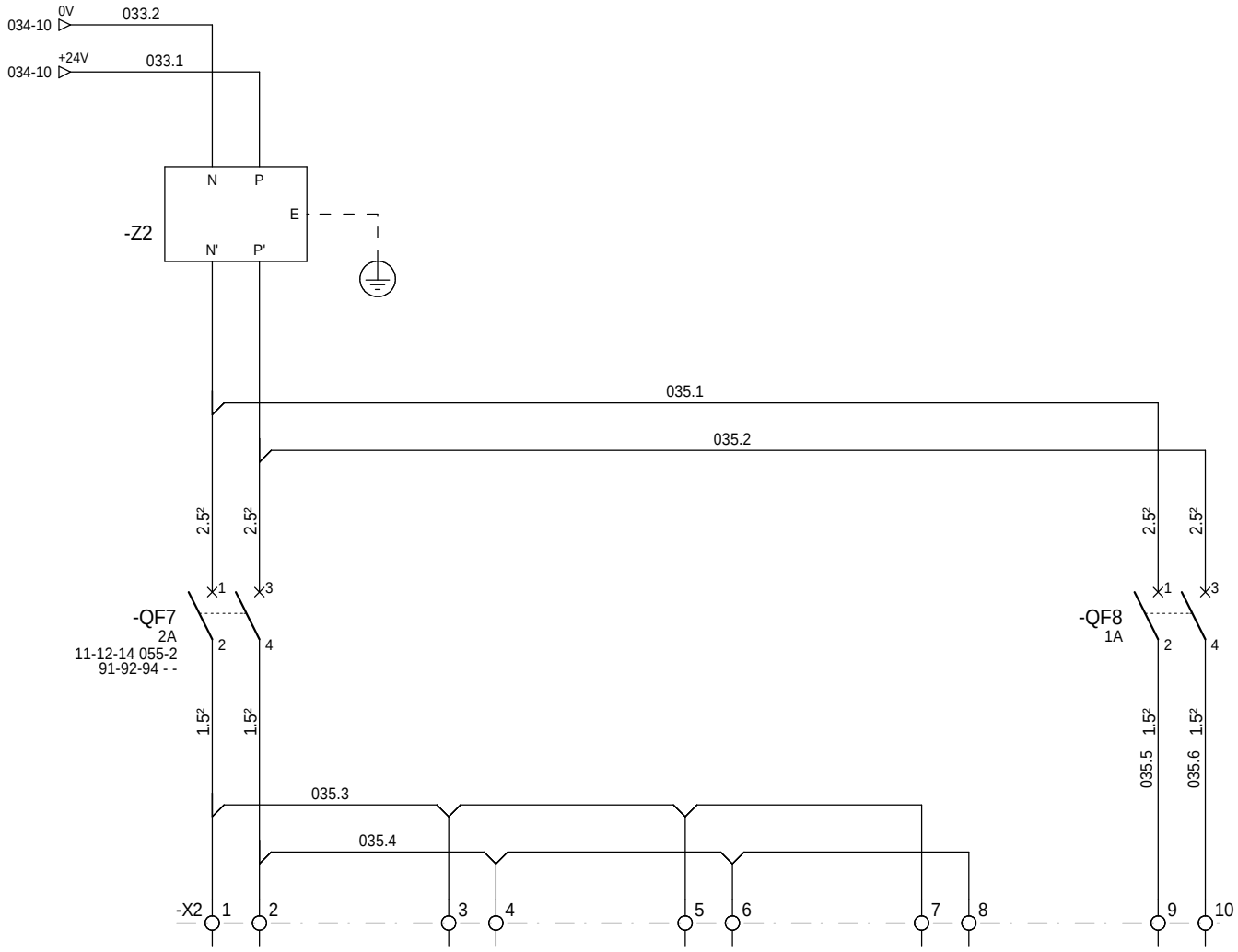


Alimentation 24Vcc
Passerelle comm.
Ond. N°1

Alimentation 24Vcc
Passerelle comm.
Ond. N°2

Alimentation 24Vcc
Passerelle comm.
Ond. N°3

Alimentation 24Vcc
Passerelle comm.
Ond. N°4

Réserve

=N201
+AP01

The technical information contained in this document is the exclusive property of Schneider Electric Industries S.A.S and cannot be used or disclosed to third parties of any kind without its written consent. Only those drawings and diagrams certified and signed by an authorized Schneider Electric representative are valid. All devices shown in diagrams are in open position, drawn out with operating mechanism discharged and all power sources off.

Les informations techniques contenues dans ce document sont la propriete exclusive de Schneider Electric Industries S.A.S et ne peuvent etre utilisees ou divulguees a des tiers quels qu'ils soient sans son accord ecrit. Seuls nous engagent les plans revetus du cachet et signes par un representant de la societe Schneider Electric. Les appareils sur ce schéma sont en position ouvert - désarmés - débrochés - toutes sources coupées.

| Ind. Rev | Date Date | Modification / Modification | Archiv. Micro-filmed | Ind. Rev | Date Date | Modification / Modification | Archiv. Micro-filmed |
|---|---|---|---|---|---|---|---|
| 00 | 26/03/2013 | Edition originale / First issue | | | | | |

DISTRIBUTION DES POLARITES 24VCC

MONITORING
PHOTOVOLTAIQUE
CASINO LOT 5
PTR

Schneider Electric

ABE00014

| Projet - No commande / Project - Order No. | Indice Rev | Folio Sheet |
|---|---|---|
| FR-7000166 | 00 | 035 |

A3 suite - 01/2008

The technical information contained in this document is the exclusive property of Schneider Electric Industries S.A.S and cannot be used or disclosed to third parties of any kind without its written consent. Only those drawings and documents marked "Contract" or "Order" are binding for execution. All devices shown in the drawings are in open position, drawn out with operating mechanism discharged and all power sources off.

Les informations techniques contenues dans ce document sont la propriete exclusive de Schneider Electric Industries S.A.S et ne peuvent etre utilisees ou divulguees a des tiers quels qu'ils soient sans son accord ecrit. Seuls nous engagent les plans portant la mention "contrat" ou "ordre". Les appareils figurant sur les schemas sont en position ouvert - désarmés - débrochés - toutes sources coupées.

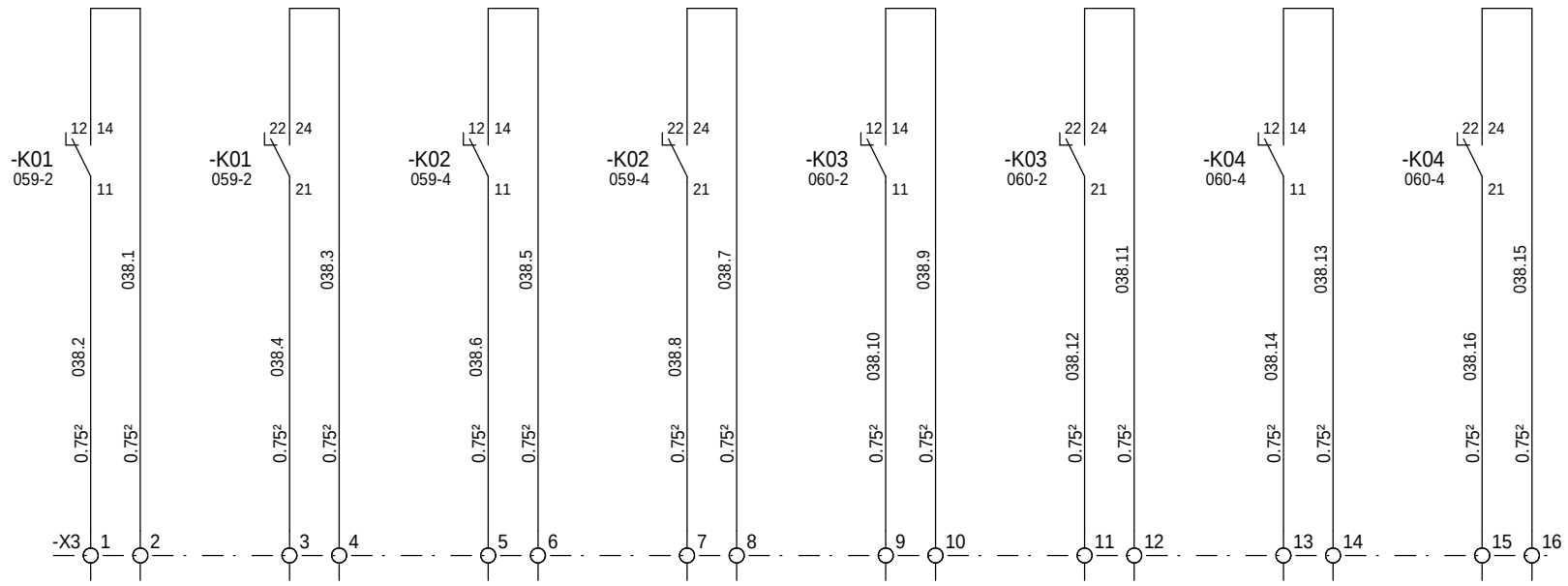


Commande onduleur N°1 | Réserve onduleur N°1 | Commande onduleur N°2 | Réserve onduleur N°2 | Commande onduleur N°3 | Réserve onduleur N°3 | Commande onduleur N°4 | Réserve onduleur N°4

=N201
+AP01

| Ind. Rev | Date Date | Modification / Modification | Archiv. Micro-filmed | Ind. Rev | Date Date | Modification / Modification | Archiv. Micro-filmed |
|---|---|---|---|---|---|---|---|
| 00 | 26/03/2013 | Edition originale / First issue | | | | | |

COMMANDE ONDULEURS

MONITORING
PHOTOVOLTAIQUE
CASINO LOT 5
PTR

Schneider Electric

ABE00014

| Projet - No commande / Project - Order No. | Indice / Rev | Folio / Sheet |
|---|---|---|
| FR-7000166 | 00 | 038 |

A3 suite - 01/2008

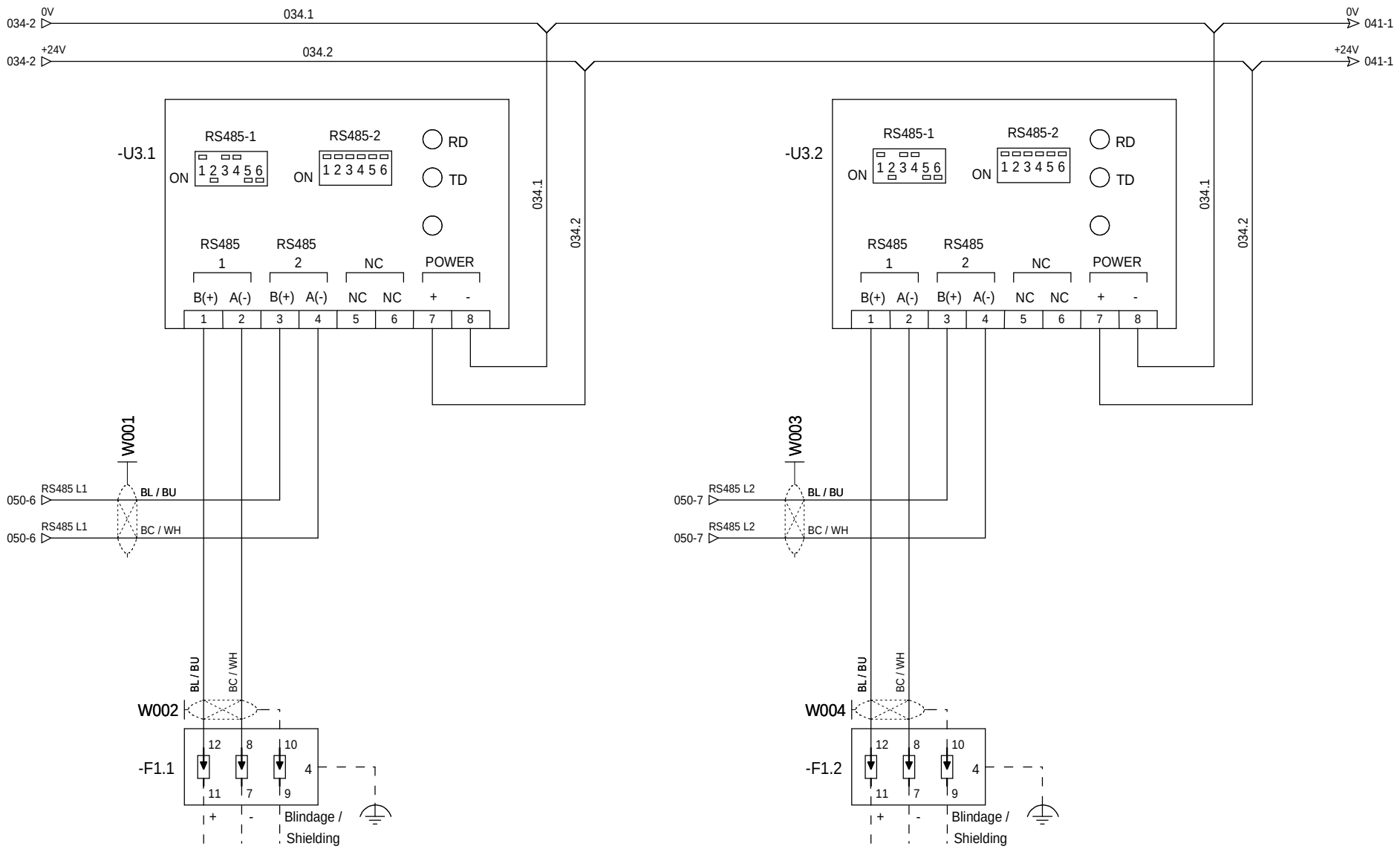


Raccordement sur parafoudre avec reprise de blindage à 360°vers Array box ligne 1

Raccordement sur parafoudre avec reprise de blindage à 360°vers Array box ligne 2

=N201
+AP01

The technical information contained in this document is the exclusive property of Schneider Electric Industries S.A.S and cannot be used or disclosed to third parties of any kind without its written consent. Only those drawings and documents certified for construction by the Schneider Electric Industries S.A.S are valid. All devices shown in the drawings are in open position, drawn out with operating mechanism discharged and all power sources off.

Les informations techniques contenues dans ce document sont la propriete exclusive de Schneider Electric Industries S.A.S et ne peuvent etre utilisees ou divulguees a des tiers quels qu'ils soient sans son accord ecrit. Seuls nous engagent les plans et documents certifiés pour construire. Les appareils montrés sur ce schéma sont en position ouvert - désarmés - débrochés - toutes sources coupées.

| Ind. Rev | Date Date | Modification / Modification | Archiv. Micro-filmed | Ind. Rev | Date Date | Modification / Modification | Archiv. Micro-filmed |
|---|---|---|---|---|---|---|---|
| 01 | 07/05/2013 | Mise à jour | | | | | |
| 00 | 26/03/2013 | Edition originale / First issue | | | | | |

EXTENSEUR MODBUS RS485 24VCC

MONITORING
PHOTOVOLTAIQUE
CASINO LOT 5
PTR

Schneider Electric

ABE00014

| Projet - No commande Project - Order No. | Indice Rev | Folio Sheet |
|---|---|---|
| FR-7000166 | 01 | 040 |

A3 suite - 01/2008

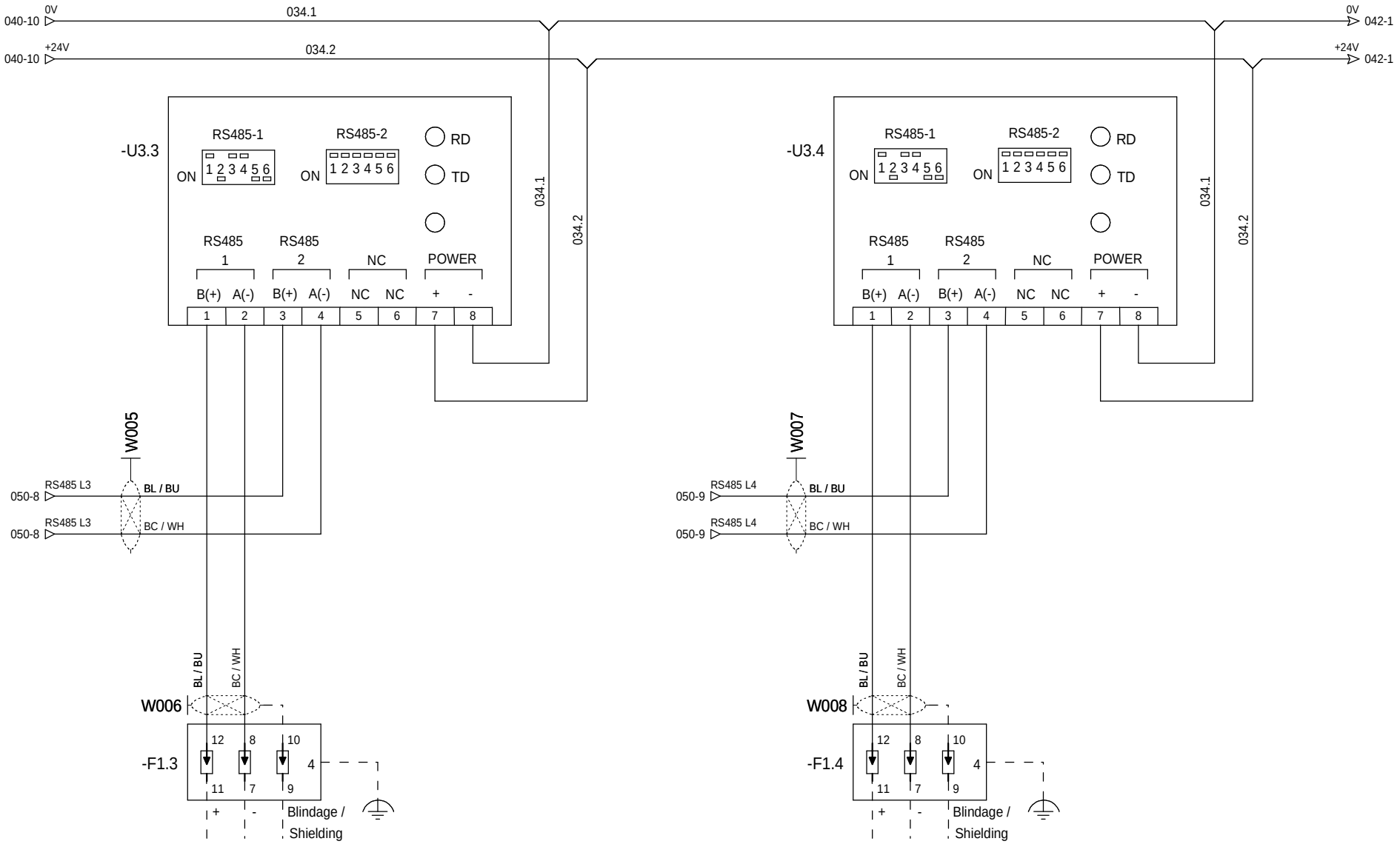


Raccordement sur parafoudre avec reprise de blindage à 360°vers Array box ligne 3

Raccordement sur parafoudre avec reprise de blindage à 360°vers Array box ligne 4

=N201
+AP01

The technical information contained in this document is the exclusive property of Schneider Electric Industries S.A.S and cannot be used or disclosed to third parties of any kind without its written consent. Only those drawings and documents signed and dated by Schneider Electric are valid. Drawings and diagrams shown in this document are in open position, drawn out with operating mechanism discharged and all power sources off.

Les informations techniques contenues dans ce document sont la propriete exclusive de Schneider Electric Industries S.A.S et ne peuvent etre utilisees ou divulguees a des tiers quels qu'ils soient sans son accord ecrit. Seuls nous engagent des documents signes et dates par Schneider Electric. Les schemas ci-dessous sont en position ouvert - desarmes - debrochés - toutes sources coupées.

| Ind. Rev | Date Date | Modification / Modification | Archiv. Micro-filmed | Ind. Rev | Date Date | Modification / Modification | Archiv. Micro-filmed |
|---|---|---|---|---|---|---|---|
| 01 | 07/05/2013 | Mise à jour | | | | | |
| 00 | 26/03/2013 | Edition originale / First issue | | | | | |

EXTENSEUR MODBUS RS485 24VCC

MONITORING
PHOTOVOLTAIQUE
CASINO LOT 5
PTR

Schneider Electric

ABE00014

| Projet - No commande / Project - Order No. | Indice / Rev | Folio / Sheet |
|---|---|---|
| FR-7000166 | 01 | 041 |

A3 suite - 01/2008

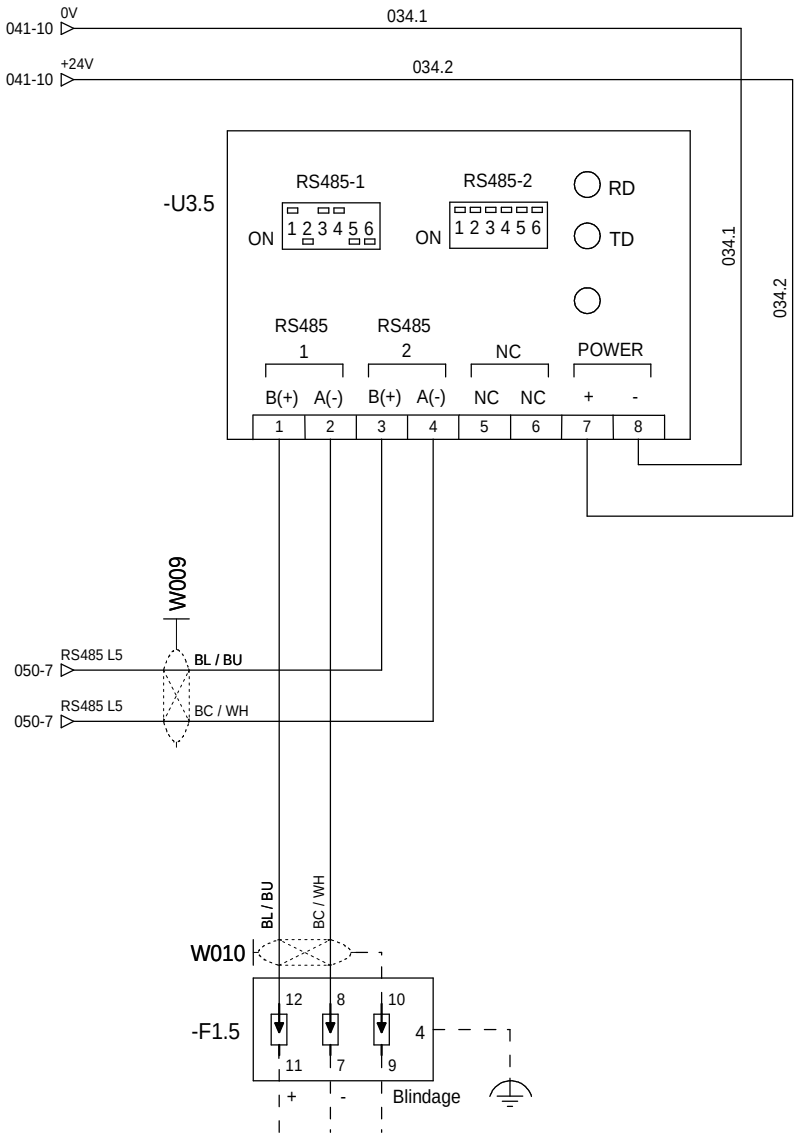


Raccordement sur parafoudre avec reprise de blindage à 360°vers Array box ligne 5

=N201
+AP01

The technical information contained in this document is the exclusive property of Schneider Electric Industries S.A.S and cannot be used or disclosed to third parties of any kind without its written consent. Only those drawings and documents marked "Approved for construction" are to be used for the purpose of building the equipment. Unless otherwise specified, all devices shown in the drawings are in open position, drawn out with operating mechanism discharged and all power sources off.

Les informations techniques contenues dans ce document sont la propriete exclusive de Schneider Electric Industries S.A.S et ne peuvent etre utilisees ou divulguees a des tiers quels qu'ils soient sans son accord ecrit. Seuls nous engagent les plans portant la mention "Bon pour construction". Les appareils montres sur les plans et schemas sont en position ouvert - desarmes - debrochés - toutes sources coupées.

| Ind. Rev | Date Date | Modification / Modification | Archiv. Micro-filmed | Ind. Rev | Date Date | Modification / Modification | Archiv. Micro-filmed |
|---|---|---|---|---|---|---|---|
| 01 | 07/05/2013 | Mise à jour | | | | | |
| 00 | 26/03/2013 | Edition originale / First issue | | | | | |

EXTENSEUR MODBUS RS485 24VCC

MONITORING
PHOTOVOLTAIQUE
CASINO LOT 5
PTR

Schneider Electric

ABE00014

| Projet - No commande / Project - Order No. | Indice / Rev | Folio / Sheet |
|---|---|---|
| FR-7000166 | 01 | 042 |

A3 suite - 01/2008

The technical information contained in this document is the exclusive property of Schneider Electric Industries S.A.S and cannot be used or disclosed to third parties of any kind without its written consent. Only those drawings and documents marked "certified" or "for construction" are provided for construction purposes. All devices shown in the drawings are in open position, drawn out with operating mechanism discharged and all power sources off.

Les informations techniques contenues dans ce document sont la propriete exclusive de Schneider Electric Industries S.A.S et ne peuvent etre utilisees ou divulguees a des tiers quels qu'ils soient sans son accord ecrit. Seuls nous engagent les plans portant la mention "certifie" ou "construction". Les appareils representes sur ce schéma sont en position ouvert - désarmés - débrochés - toutes sources coupées.

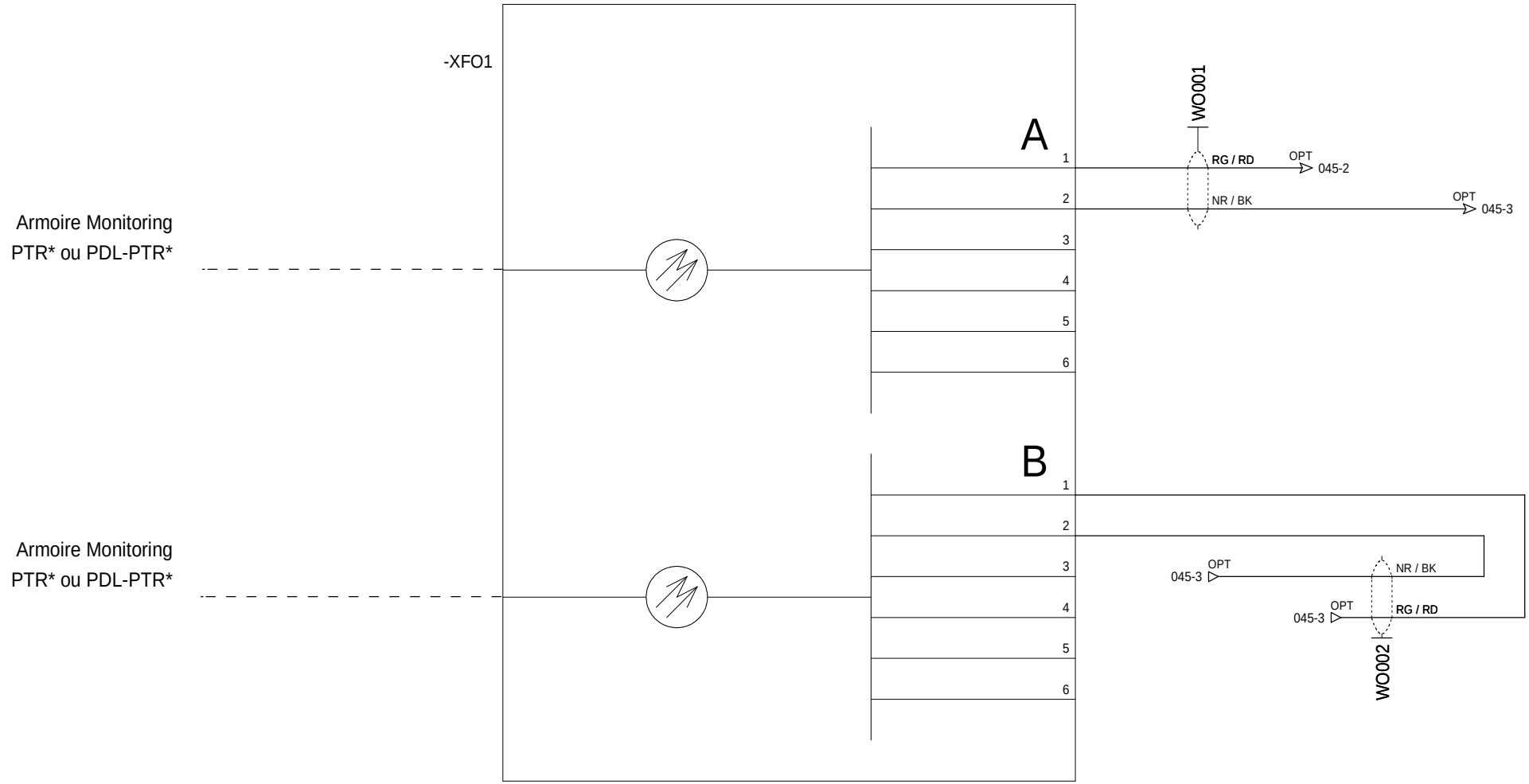


=N201
+AP01

| Ind. Rev | Date Date | Modification / Modification | Archiv. Micro-filmed | Ind. Rev | Date Date | Modification / Modification | Archiv. Micro-filmed |
|---|---|---|---|---|---|---|---|
| 00 | 26/03/2013 | Edition originale / First issue | | | | | |

COFFRET OPTIQUE FIDJI V2

MONITORING
PHOTOVOLTAIQUE
CASINO LOT 5
PTR

Schneider Electric

ABE00014

| Projet - No commande / Project - Order No. | Indice Rev | Folio Sheet |
|---|---|---|
| FR-7000166 | 00 | 044 |

A3 suite - 01/2008

The technical information contained in this document is the exclusive property of Schneider Electric Industries S.A.S and cannot be used or disclosed to third parties of any kind without its written consent. Only those drawings and diagrams certified and signed by Schneider Electric Industries S.A.S are to be used for production. All devices shown in the diagrams are in open position, drawn out with operating mechanism discharged and all power sources off.

Les informations techniques contenues dans ce document sont la propriete exclusive de Schneider Electric Industries S.A.S et ne peuvent etre utilisees ou divulguees a des tiers quels qu'ils soient sans son accord ecrit. Seuls nous engagent les plans numerotes et signes par Schneider Electric Industries S.A.S. Les appareils representes sur ce schéma sont en position ouvert - désarmés - débrochés - toutes sources coupées.

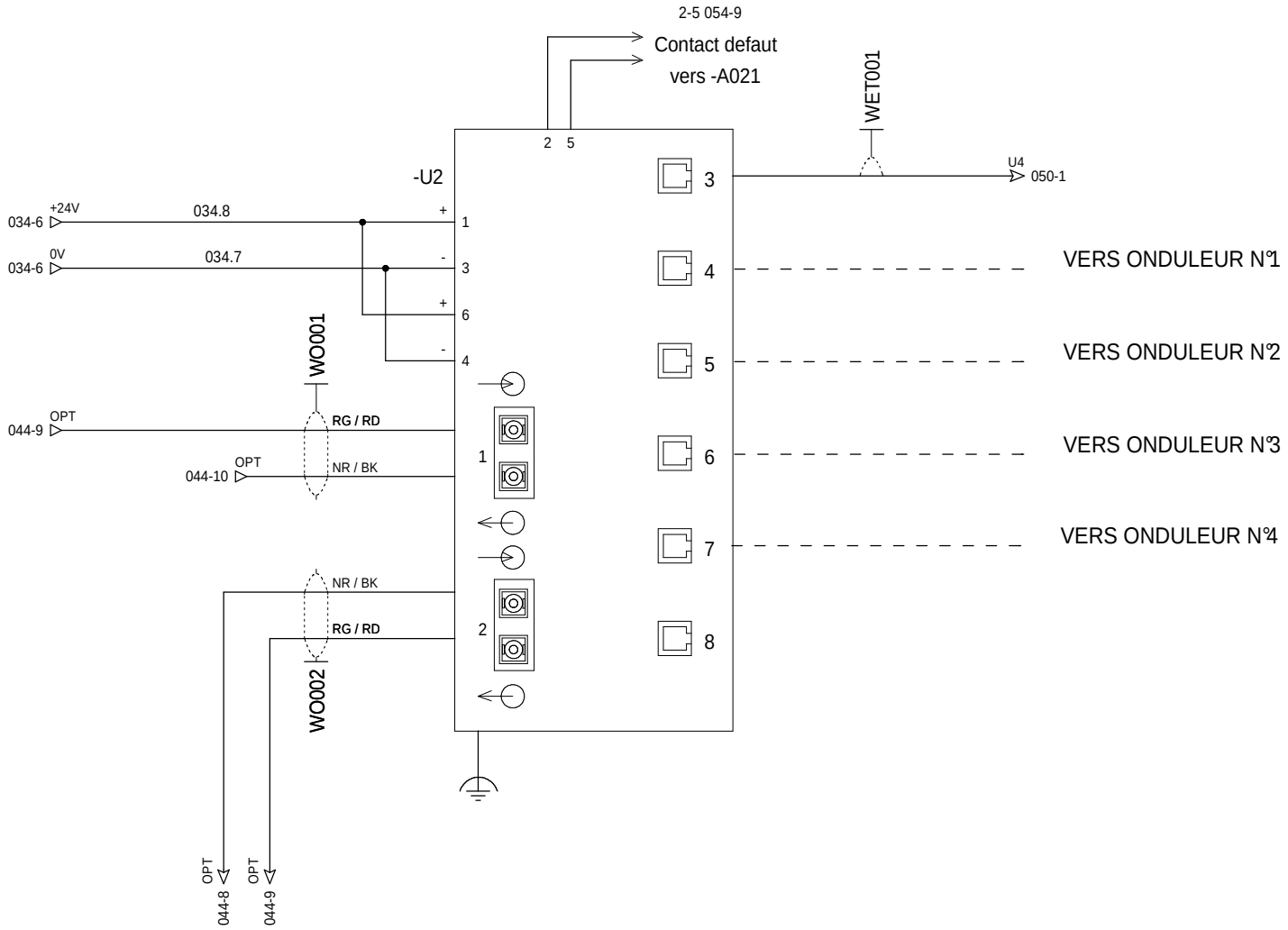


=N201
+AP01

| Ind. Rev | Date Date | Modification / Modification | Archiv. Micro-filmed | Ind. Rev | Date Date | Modification / Modification | Archiv. Micro-filmed |
|---|---|---|---|---|---|---|---|
| 01 | 07/05/2013 | Mise à jour | | | | | |
| 00 | 26/03/2013 | Edition originale / First issue | | | | | |

SWITCH ETHERNET

MONITORING
PHOTOVOLTAIQUE
CASINO LOT 5
PTR

Schneider Electric

ABE00014

| Projet - No commande / Project - Order No. | Indice Rev | Folio Sheet |
|---|---|---|
| FR-7000166 | 01 | 045 |

A3 suite - 01/2008

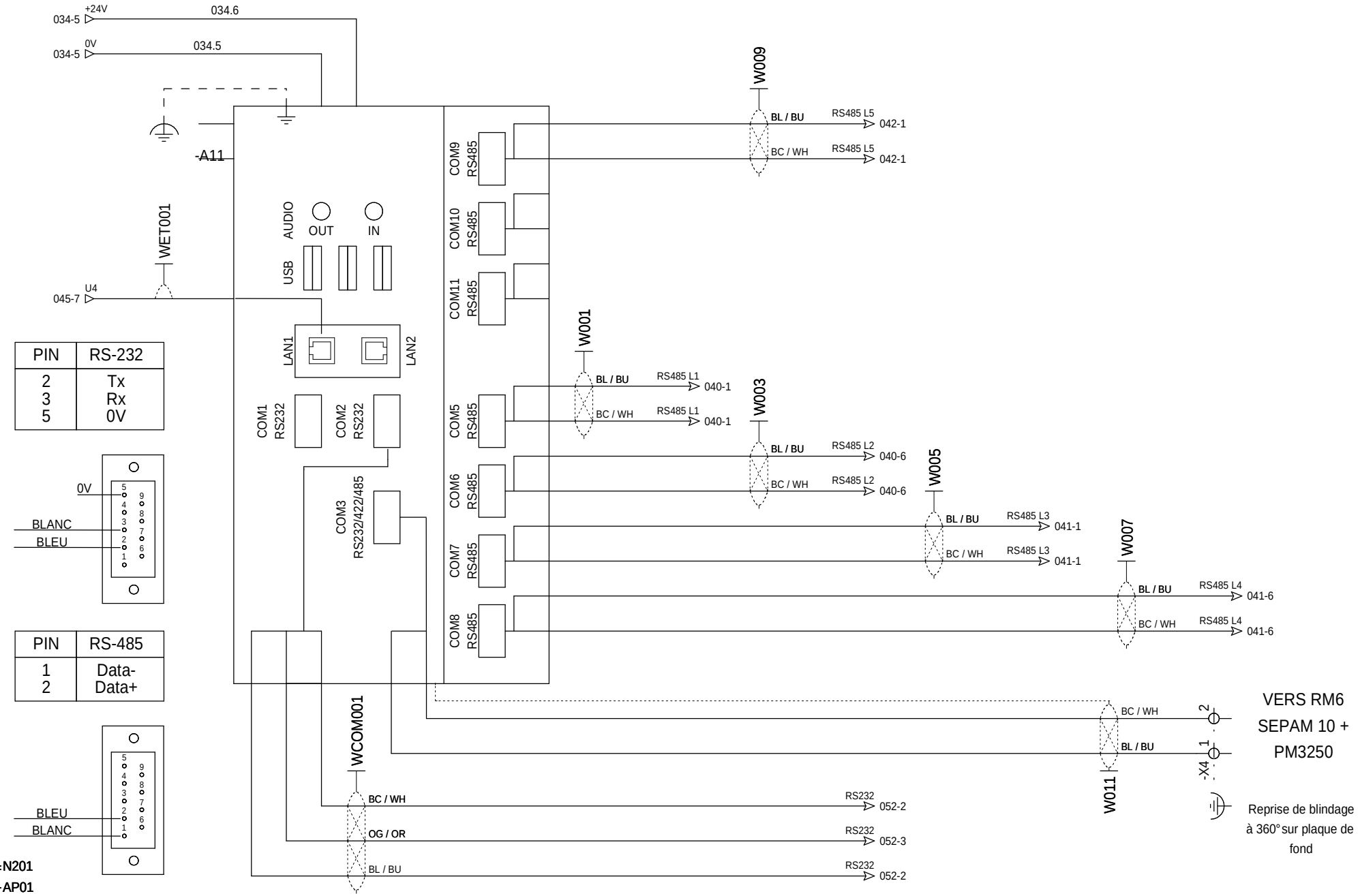


| PIN | RS-232 |
|---|---|
| 2 | Tx |
| 3 | Rx |
| 5 | 0V |

| PIN | RS-485 |
|---|---|
| 1 | Data- |
| 2 | Data+ |

The technical information contained in this document is the exclusive property of Schneider Electric Industries S.A.S and cannot be used or disclosed to third parties of any kind without its written consent. Only those drawings and documents certified by Schneider Electric are valid. All devices shown in the drawings are in open position, drawn out with operating mechanism discharged and all power sources off.

Les informations techniques contenues dans ce document sont la propriete exclusive de Schneider Electric Industries S.A.S et ne peuvent etre utilisees ou divulguees a des tiers quels qu'ils soient sans son accord ecrit. Seuls nous engagent les dessins certifies valides et conformes. Les appareils representes sur ce schéma sont en position ouvert - désarmés - débrochés - toutes sources coupées.

| Ind. Rev | Date Date | Modification / Modification | Archiv. Micro-filmed | Ind. Rev | Date Date | Modification / Modification | Archiv. Micro-filmed |
|---|---|---|---|---|---|---|---|
| 01 | 07/05/2013 | Mise à jour | | | | | |
| 00 | 26/03/2013 | Edition originale / First issue | | | | | |

PC DE TELEGESTION

MONITORING
PHOTOVOLTAIQUE
CASINO LOT 5
PTR

Schneider Electric

ABE00014

| Projet - No commande / Project - Order No. | Indice Rev | Folio Sheet |
|---|---|---|
| FR-7000166 | 01 | 050 |

A3 suite - 01/2008

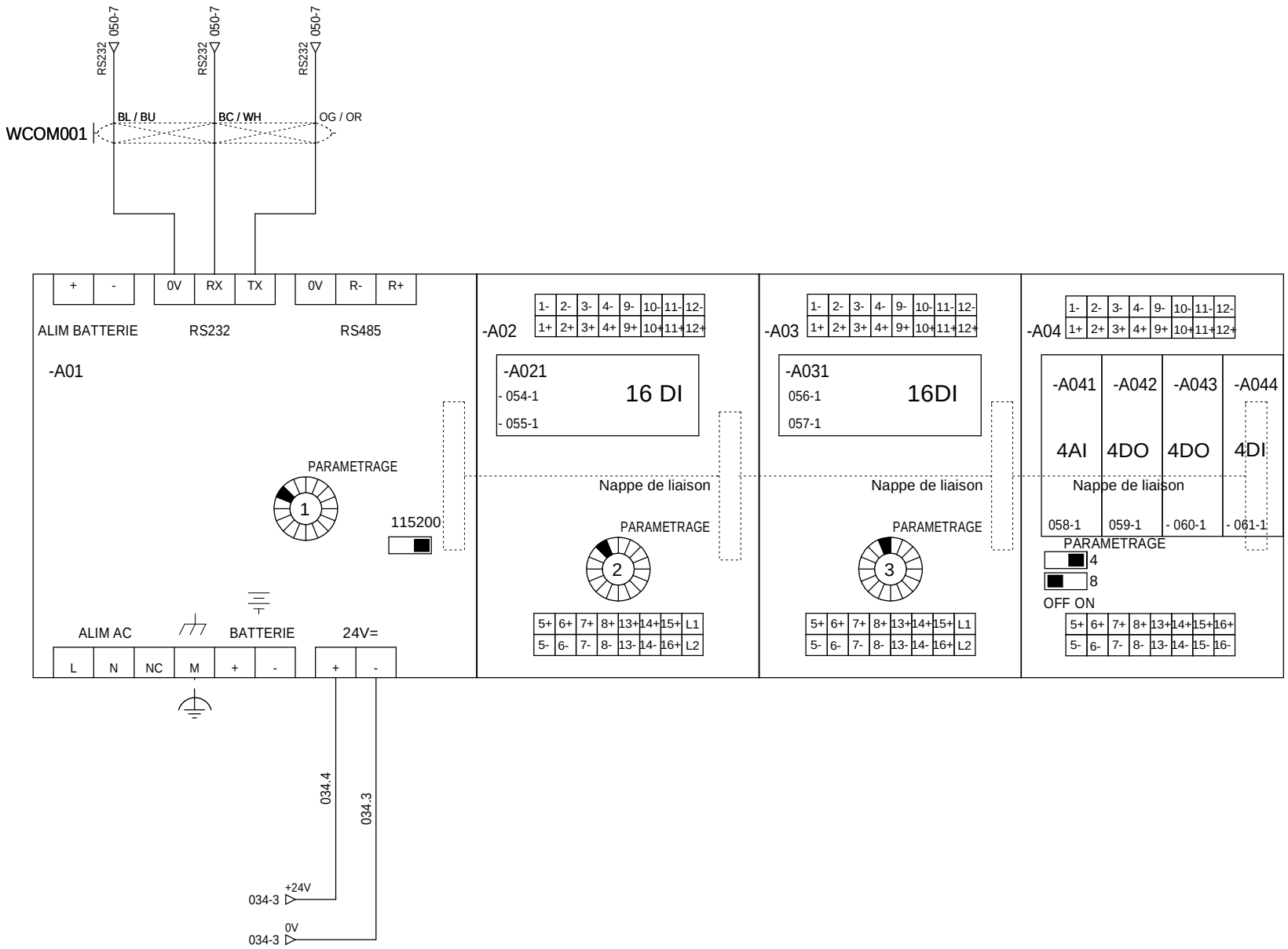


=N201
+AP01

The technical information contained in this document is the exclusive property of Schneider Electric Industries S.A.S and cannot be used or disclosed to third parties of any kind without its written consent. Only those drawings and documents entitled directly under contract with Schneider Electric are valid. All devices shown in the drawings are in open position, drawn out with operating mechanism discharged and all power sources off.

Les informations techniques contenues dans ce document sont la propriete exclusive de Schneider Electric Industries S.A.S et ne peuvent etre utilisees ou divulguees a des tiers quels qu'ils soient sans son accord ecrit. Seuls nous engagent les plans et documents etablis directement sous contrat avec Schneider Electric. Les appareils montres sur ce schéma sont en position ouvert - désarmés - débrochés - toutes sources coupées.

| Ind. Rev | Date Date | Modification / Modification | Archiv. Micro-filmed | Ind. Rev | Date Date | Modification / Modification | Archiv. Micro-filmed |
|---|---|---|---|---|---|---|---|
| 02 | 17/05/2013 | Mise à jour carte automate | | | | | |
| 00 | 26/03/2013 | Edition originale / First issue | | | | | |

API NAPAC

MONITORING
PHOTOVOLTAIQUE
CASINO LOT 5
PTR

Schneider Electric

ABE00014

| Projet - No commande (Project - Order No.) | Indice (Rev) | Folio (Sheet) |
|---|---|---|
| FR-7000166 | 02 | 052 |

A3 suite - 01/2008

| POSTE<br>PORTE LOCAL ONDULEURS | RESERVE | COFFRET AUXILIAIRES<br>DJ AUXILIAIRE<br>NON PRIORITAIRE | COFFRET AUXILIAIRES<br>DJ MONITORING | COFFRET AUXILIAIRES<br>DJ PRODUCTION PV | COFFRET AUXILIAIRES<br>AU INTERNE AU PTR | COFFRET AUXILIAIRES<br>SYNTHESE BF PARAFOUDRE<br>+ DJ VARISTANCE | ARMOIRE MONITORING<br>ETAT SWITCH RESEAU |
|---|---|---|---|---|---|---|---|

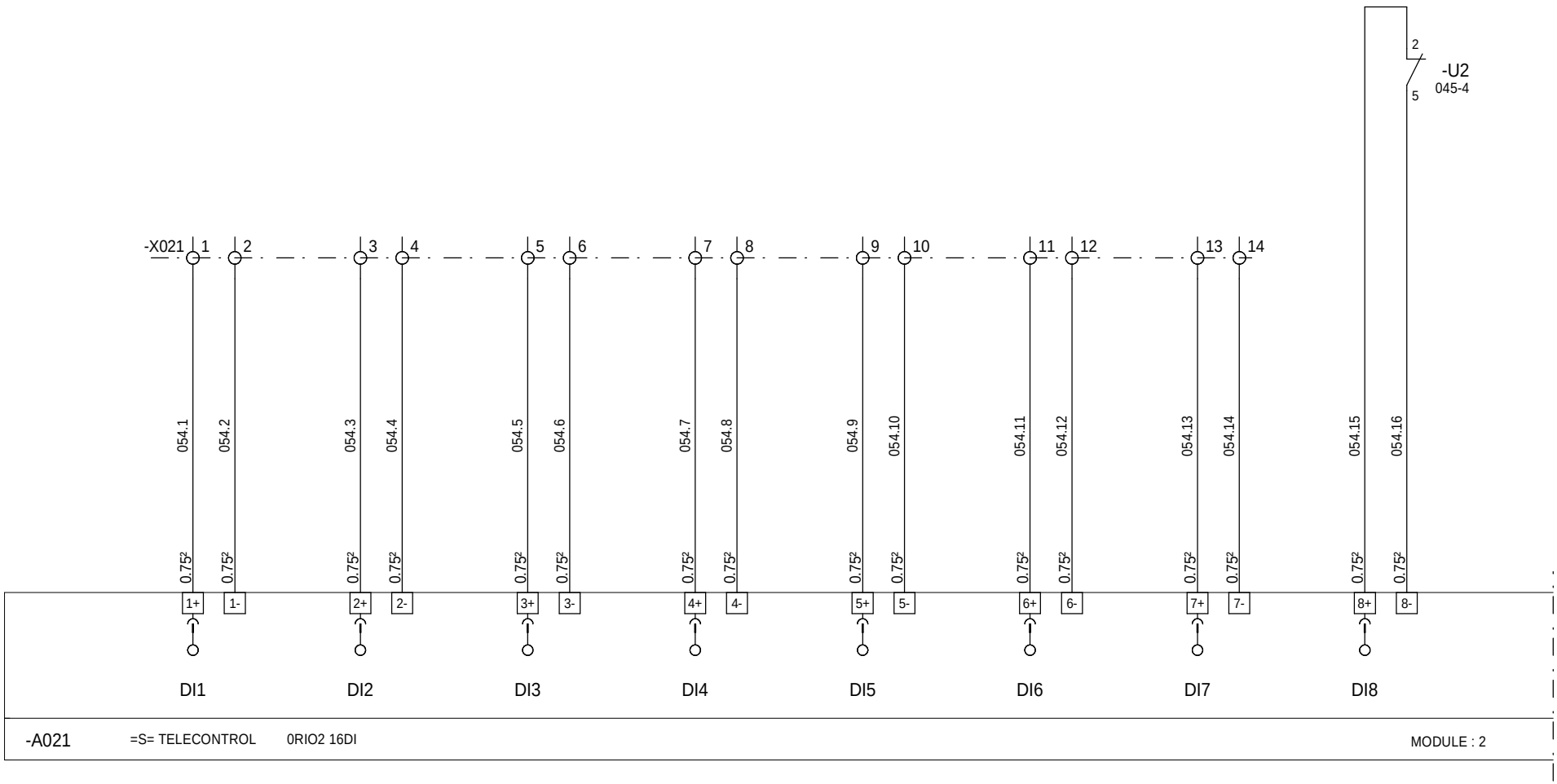


=N201
+AP01

The technical information contained in this document is the exclusive property of Schneider Electric Industries S.A.S and cannot be used or disclosed to third parties of any kind without its written consent. Only those drawings and documents entitled "Electrical Diagrams" and "Wiring Diagrams" are shown in the documentation. All devices shown in the diagrams are in open position, drawn out with operating mechanism discharged and all power sources off.

Les informations techniques contenues dans ce document sont la propriete exclusive de Schneider Electric Industries S.A.S et ne peuvent etre utilisees ou divulguees a des tiers quels qu'ils soient sans son accord ecrit. Seuls nous engagent les plans intitules "plans electriques" et "schemas de cablage" ainsi que les equipements representes sur ce schéma sont en position ouvert - désarmés - débrochés - toutes sources coupées.

| Ind. Rev | Date Date | Modification / Modification | Archiv. Micro-filmed | Ind. Rev | Date Date | Modification / Modification | Archiv. Micro-filmed |
|---|---|---|---|---|---|---|---|
| 01 | 07/05/2013 | Mise à jour | | | | | |
| 00 | 26/03/2013 | Edition originale / First issue | | | | | |

CARTE 16 ENTREES TOR
ENTREES 1 A 8

MONITORING
PHOTOVOLTAIQUE
CASINO LOT 5
PTR

Schneider Electric

ABE00014

| Projet - No commande<br>Project - Order No. | Indice<br>Rev | Folio<br>Sheet |
|---|---|---|
| FR-7000166 | 01 | 054 |

A3 suite - 01/2008

| ARMOIRE MONITORING | ONDULEUR POSTE | ONDULEUR POSTE | ONDULEUR POSTE | TRANSFORMATEUR TR1 | TRANSFORMATEUR TR1 | DISJONCTEUR | ATS UPS |
|---|---|---|---|---|---|---|---|
| SYNTHESE ETAT DJ 24V | SYNTHESE ETAT UPS | FONCTIONNEMENT SUR BATTERIES | ETAT BATTERIES, FAIBLES OU TRES FAIBLES | ETAT TRANSFORMATEUR | ALARME 1er SEUIL TEMPERATURE | ALIM NP PAR MAGASIN OUVERT / FERME | MANU / AUTO |

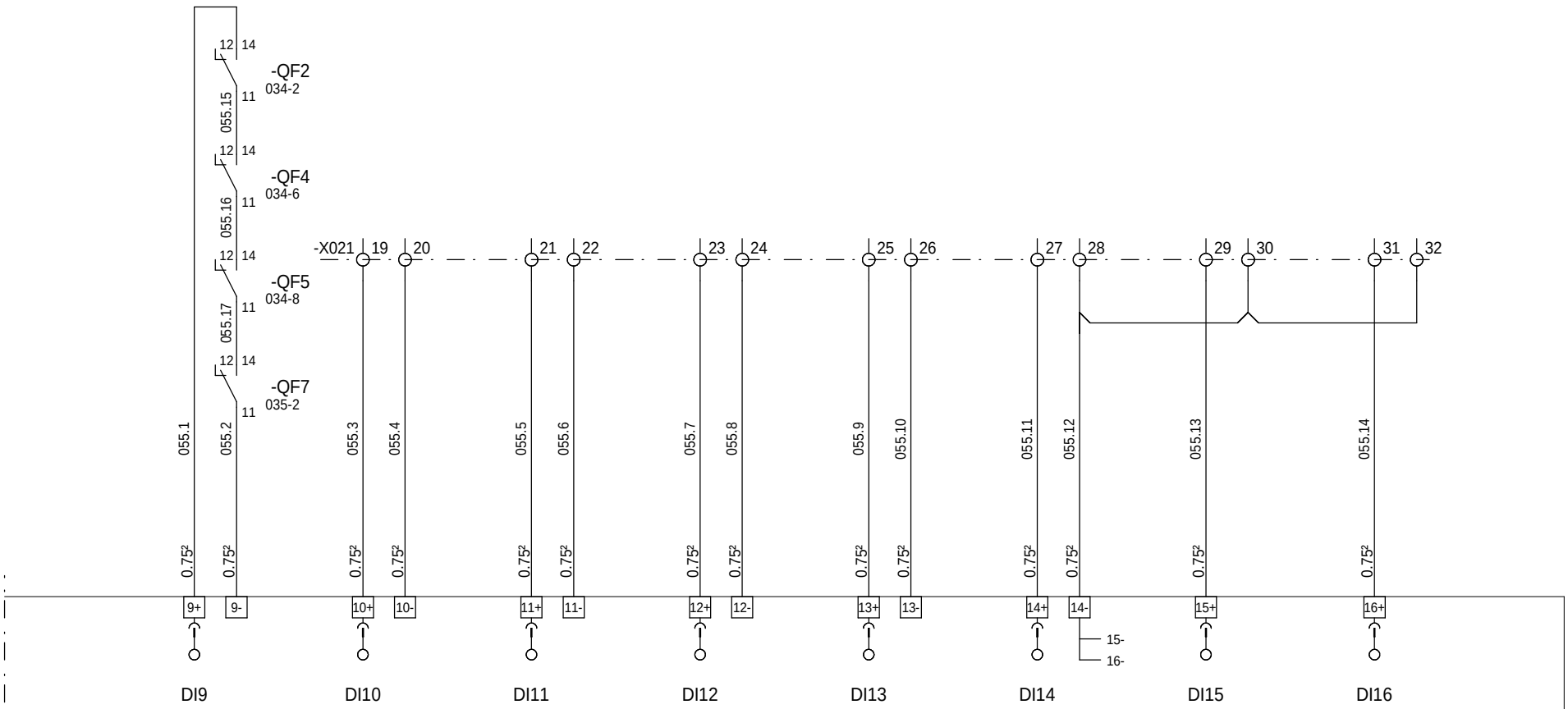


-A021 =S= TELECONTROL 0RIO2 16DI MODULE : 2

=N201
+AP01

| Ind. Rev | Date Date | Modification / Modification | Archiv. Micro-filmed | Ind. Rev | Date Date | Modification / Modification | Archiv. Micro-filmed |
|---|---|---|---|---|---|---|---|
| 01 | 07/05/2013 | Mise à jour | | | | | |
| 00 | 26/03/2013 | Edition originale / First issue | | | | | |

CARTE 16 ENTREES TOR
ENTREES 9 A 16

MONITORING
PHOTOVOLTAIQUE
CASINO LOT 5
PTR

Schneider Electric

ABE00014

| Projet - No commande / Project - Order No. | Indice / Rev | Folio / Sheet |
|---|---|---|
| FR-7000166 | 01 | 055 |

A3 suite - 01/2008

The technical information contained in this document is the exclusive property of Schneider Electric Industries S.A.S and cannot be used or disclosed to third parties of any kind without its written consent. Only those drawings and documents entitled "Order Drawings" are provided for production purposes. All devices shown in the drawings are in open position, drawn out with operating mechanism discharged and all power sources off.

Les informations techniques contenues dans ce document sont la propriete exclusive de Schneider Electric Industries S.A.S et ne peuvent etre utilisees ou divulguees a des tiers quels qu'ils soient sans son accord ecrit. Seuls nous engagent les plans intitules "Plans d'execution". Les appareils sont representes sur ce schéma sont en position ouvert - désarmés - débrochés - toutes sources coupées.

| RM6 CHIEN DE GARDE SEPAM | RM6 ETAT DISJONCTEUR | RM6 ETAT SECTIONNEUR DE TERRE | RM6 INTERRUPTEUR OUVERT / FERME | COMMUTATEUR GENE SOURCE AUXILIAIRE MANU / AUTO | COMMUTATEUR GENE SOURCE MAGASIN OUVERT / FERME | COMMUTATEUR GENE SOURCE PHOTOVOLTAIQUE OUVERT / FERME | RM6 I1 SECTIONNEUR TERRE OUVERT / FERME |
|---|---|---|---|---|---|---|---|

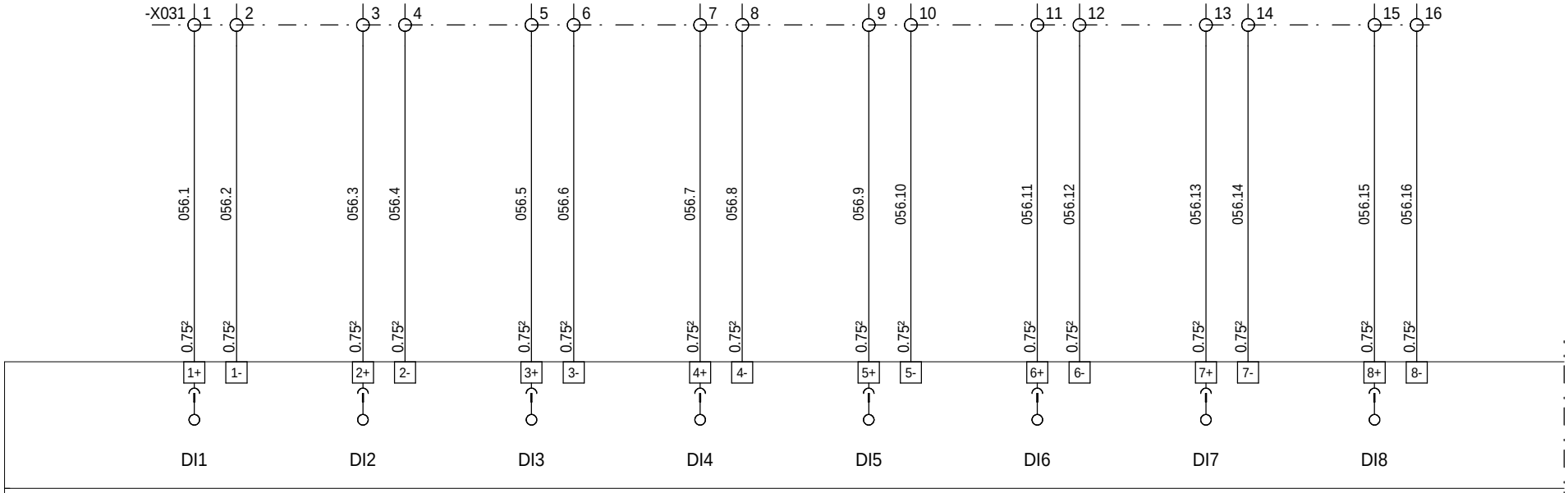


=N201
+AP01

The technical information contained in this document is the exclusive property of Schneider Electric Industries S.A.S and cannot be used or disclosed to third parties of any kind without its written consent. Only those drawings and documents entitled "Order Drawings" are provided for production purposes. All devices shown in the drawings are in open position, drawn out with operating mechanism discharged and all power sources off.

Les informations techniques contenues dans ce document sont la propriete exclusive de Schneider Electric Industries S.A.S et ne peuvent etre utilisees ou divulguees a des tiers quels qu'ils soient sans son accord ecrit. Seuls nous engagent les plans intitules "plans d'execution". Les appareils representes sur ce schéma sont en position ouvert - désarmés - débrochés - toutes sources coupées.

| Ind. Rev | Date Date | Modification / Modification | Archiv. Micro-filmed | Ind. Rev | Date Date | Modification / Modification | Archiv. Micro-filmed |
|---|---|---|---|---|---|---|---|
| 01 | 07/05/2013 | Mise à jour | | | | | |
| 00 | 26/03/2013 | Edition originale / First issue | | | | | |

CARTE 16 ENTREES TOR
ENTREES 1 A 8

MONITORING
PHOTOVOLTAIQUE
CASINO LOT 5
PTR

Schneider Electric

ABE00014

| Projet - No commande Project - Order No. | Indice Rev | Folio Sheet |
|---|---|---|
| FR-7000166 | 01 | 056 |

A3 suite - 01/2008

| COFFRET DC<br>ONDULEUR 1<br>DISJONCTEUR DE MALT | COFFRET DC<br>ONDULEUR 2<br>DISJONCTEUR DE MALT | COFFRET DC<br>ONDULEUR 3<br>DISJONCTEUR DE MALT | COFFRET DC<br>ONDULEUR 4<br>DISJONCTEUR DE MALT | Armoire CC<br>INV1 Seuil haut température | Armoire CC<br>INV2 Seuil haut température | Armoire CC<br>INV3 Seuil haut température | Armoire CC<br>INV4 Seuil haut température |
|---|---|---|---|---|---|---|---|

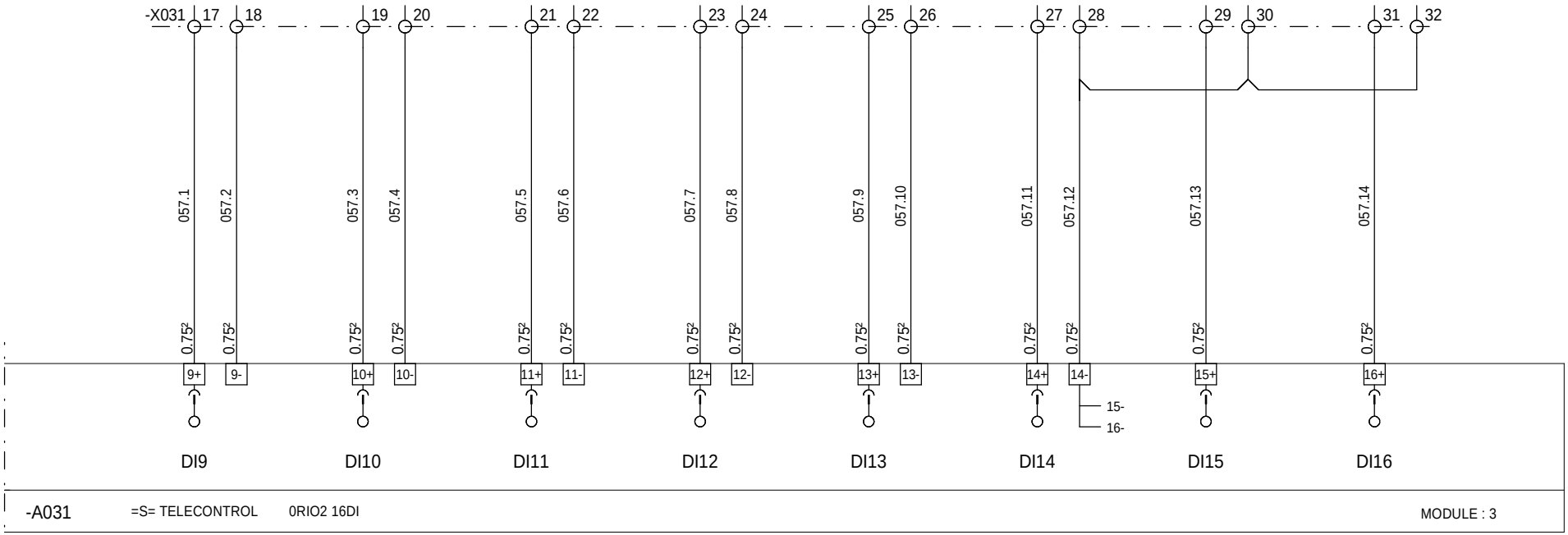


=N201
+AP01

The technical information contained in this document is the exclusive property of Schneider Electric Industries S.A.S and cannot be used or disclosed to third parties of any kind without its written consent. Only those drawings and documents certified for construction by an authorized Schneider Electric representative are valid. All devices shown in the drawings are in open position, drawn out with operating mechanism discharged and all power sources off.

Les informations techniques contenues dans ce document sont la propriete exclusive de Schneider Electric Industries S.A.S et ne peuvent etre utilisees ou divulguees a des tiers quels qu'ils soient sans son accord ecrit. Seuls nous engagent des documents certifiés pour construction par un representant Schneider Electric. Les appareils representés sur ce schéma sont en position ouvert - désarmés - débrochés - toutes sources coupées.

| Ind. Rev | Date Date | Modification / Modification | Archiv. Micro-filmed | Ind. Rev | Date Date | Modification / Modification | Archiv. Micro-filmed |
|---|---|---|---|---|---|---|---|
| 00 | 26/03/2013 | Edition originale / First issue | | | | | |

CARTE 16 ENTREES TOR
ENTREES 9 A 16

MONITORING
PHOTOVOLTAIQUE
CASINO LOT 5
PTR

Schneider Electric

ABE00014

| Projet - No commande<br>Project - Order No. | Indice<br>Rev | Folio<br>Sheet |
|---|---|---|
| FR-7000166 | 00 | 057 |

A3 suite - 01/2008

| POSTE TEMPERATURE INTERIEURE | RSESERVE | RESERVE | RESERVE |
|---|---|---|---|

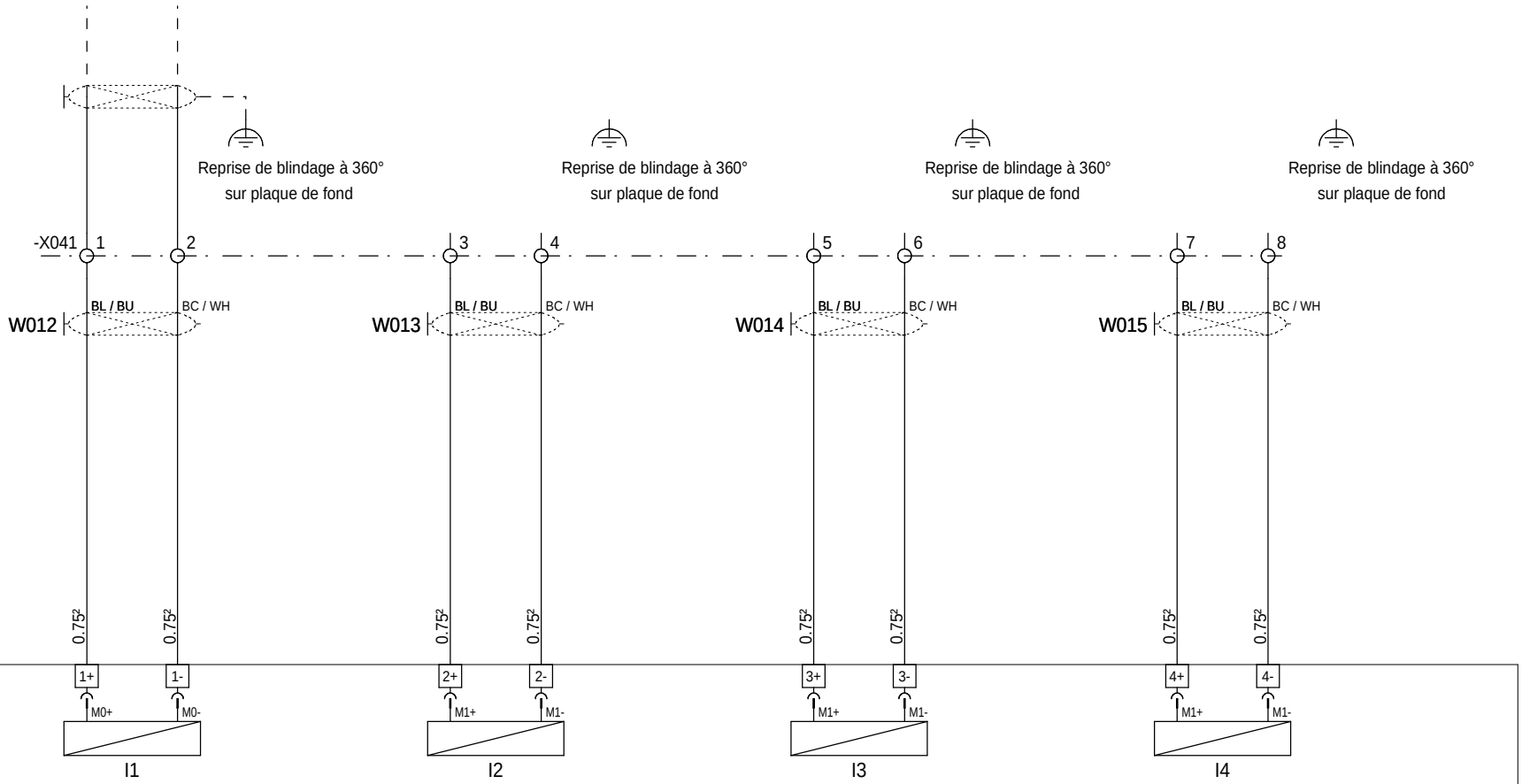


-A041 =S= TELECONTROL 0RIO1 04AI MODULE : 5

=N201
+AP01

The technical information contained in this document is the exclusive property of Schneider Electric Industries S.A.S and cannot be used or disclosed to third parties of any kind without its written consent. Only those drawings and documents entitled "Approved for construction" are to be used for the purpose of construction. All devices shown in the drawings are in open position, drawn out with operating mechanism discharged and all power sources off.

Les informations techniques contenues dans ce document sont la propriete exclusive de Schneider Electric Industries S.A.S et ne peuvent etre utilisees ou divulguees a des tiers quels qu'ils soient sans son accord ecrit. Seuls nous engagent les plans portant la mention "Bon pour execution". Les appareils montres sur les plans sont en position ouverte, mecanisme de commande decharge et toutes sources d'alimentation hors service. Les appareils representes sur ce schéma sont en position ouvert - désarmés - débrochés - toutes sources coupées.

| Ind. Rev | Date Date | Modification / Modification | Archiv. Micro-filmed | Ind. Rev | Date Date | Modification / Modification | Archiv. Micro-filmed |
|---|---|---|---|---|---|---|---|
| 00 | 26/03/2013 | Edition originale / First issue | | | | | |

CARTE 4 ENTREES ANALOGIQUES UNIVERSELLES

MONITORING PHOTOVOLTAIQUE CASINO LOT 5 PTR

Schneider Electric

ABE00014

| Projet - No commande / Project - Order No. | Indice Rev | Folio Sheet |
|---|---|---|
| FR-7000166 | 00 | 058 |

A3 suite - 01/2008

| ONDULEUR POSTE COMMANDE MARCHE ONDULEUR 1 | ONDULEUR POSTE COMMANDE ARRET ONDULEUR 1 | ONDULEUR POSTE COMMANDE MARCHE ONDULEUR 2 | ONDULEUR POSTE COMMANDE ARRET ONDULEUR 2 | | | | |
|---|---|---|---|---|---|---|---|

-A042 =S= TELECONTROL 0RIO1 04DO MODULE : 6

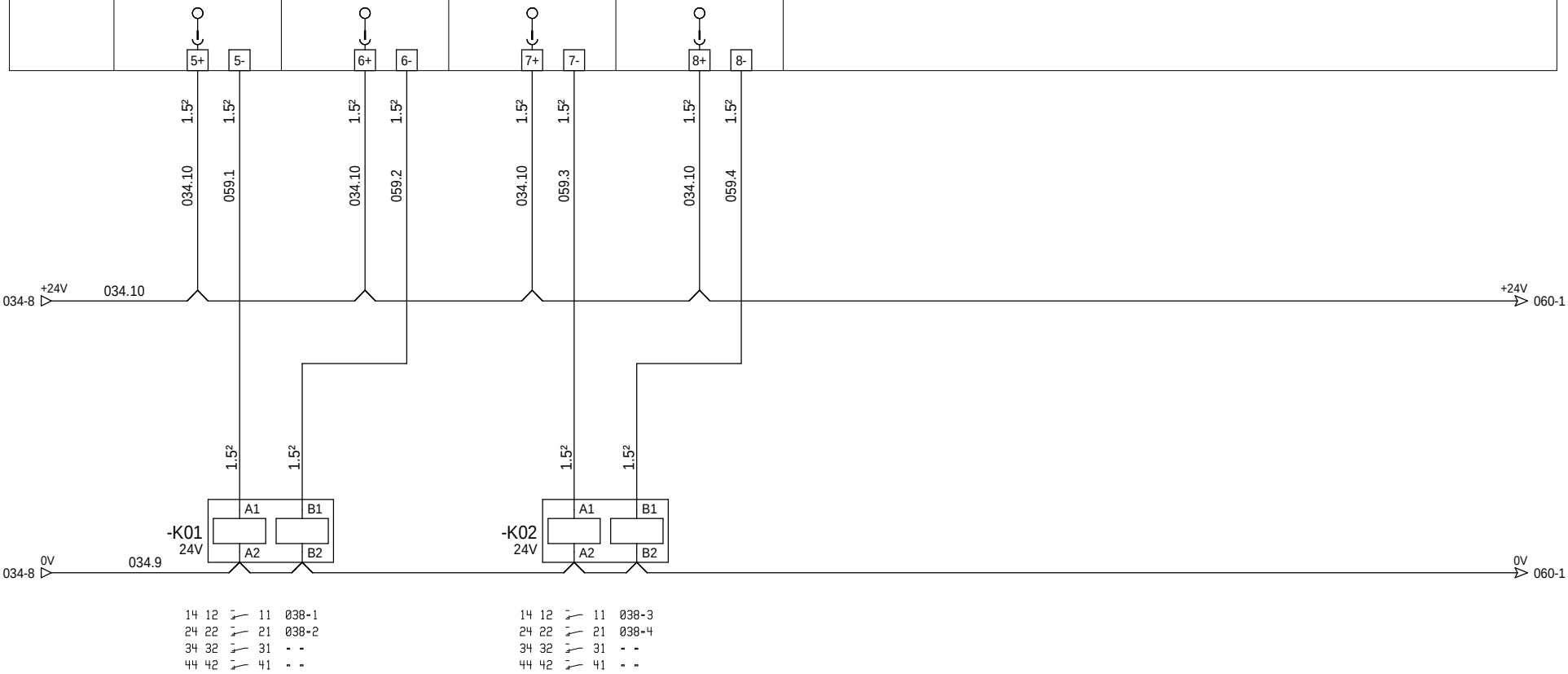


=N201
+AP01

| Ind. Rev | Date Date | Modification / Modification | Archiv. Micro-filmed | Ind. Rev | Date Date | Modification / Modification | Archiv. Micro-filmed |
|---|---|---|---|---|---|---|---|
| 00 | 26/03/2013 | Edition originale / First issue | | | | | |

CARTE 4 SORTIES TOR
RELAIS ELECTROMECANIQUES

MONITORING
PHOTOVOLTAIQUE
CASINO LOT 5
PTR

Schneider Electric

ABE00014

| Projet - No commande / Project - Order No. | Indice Rev | Folio Sheet |
|---|---|---|
| FR-7000166 | 00 | 059 |

A3 suite - 01/2008

The technical information contained in this document is the exclusive property of Schneider Electric Industries S.A.S and cannot be used or disclosed to third parties of any kind without its written consent. Only those drawings and diagrams marked "approved for construction" are to be used for the purpose of building up the equipment. Only those drawings are in open position, drawn out with operating mechanism discharged and all power sources off.

Les informations techniques contenues dans ce document sont la propriete exclusive de Schneider Electric Industries S.A.S et ne peuvent etre utilisees ou divulguees a des tiers quels qu'ils soient sans son accord ecrit. Seuls nous engagent les plans marqués "bon pour construire". Les plans sur ce schéma sont en position ouvert - désarmés - débrochés - toutes sources coupées.

| ONDULEUR POSTE COMMANDE MARCHE ONDULEUR 3 | ONDULEUR POSTE COMMANDE ARRET ONDULEUR 3 | ONDULEUR POSTE COMMANDE MARCHE ONDULEUR 4 | ONDULEUR POSTE COMMANDE ARRET ONDULEUR 4 | | | | |
|---|---|---|---|---|---|---|---|

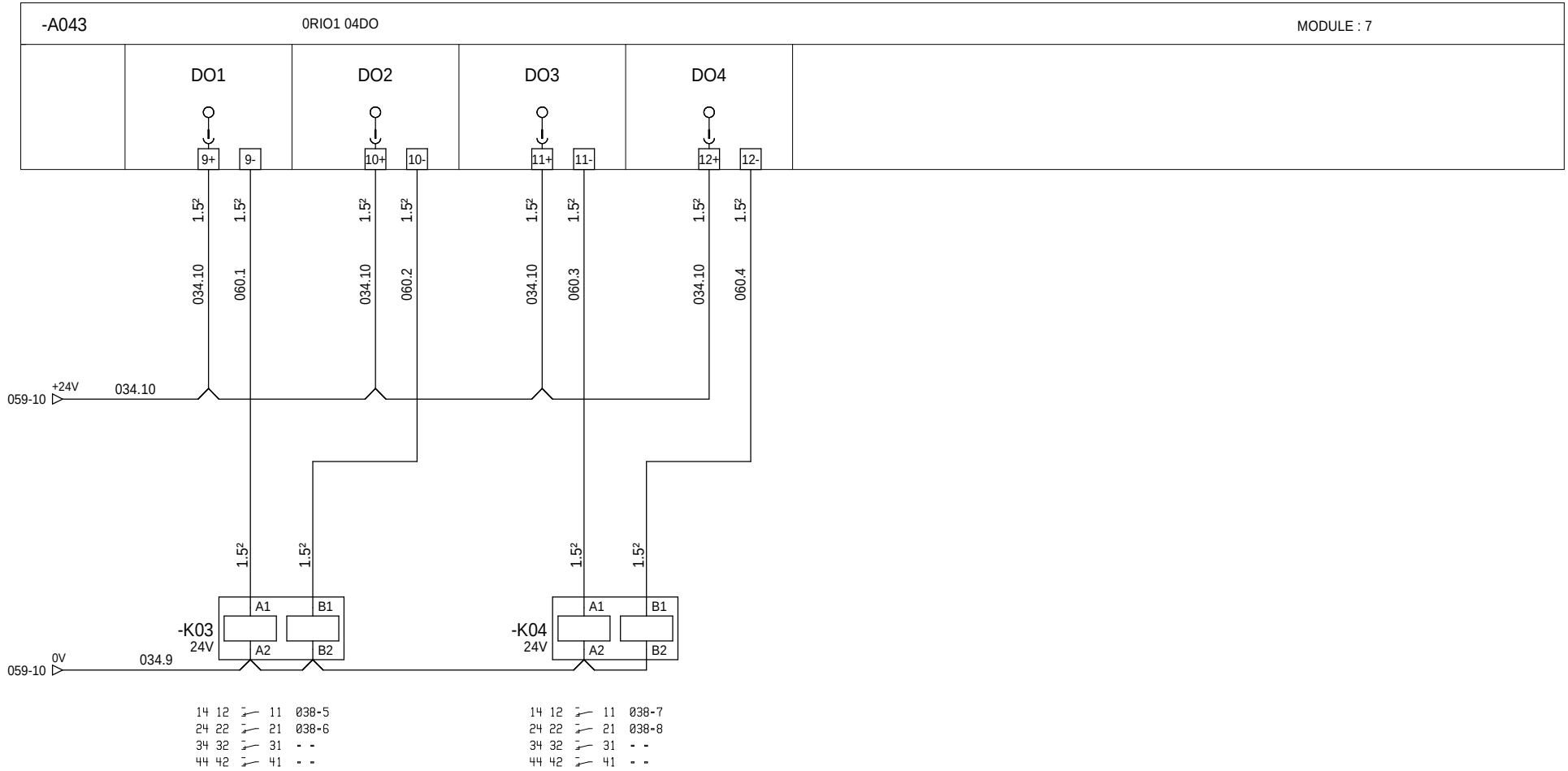


=N201
+AP01

| Ind. Rev | Date Date | Modification / Modification | Archiv. Micro-filmed | Ind. Rev | Date Date | Modification / Modification | Archiv. Micro-filmed |
|---|---|---|---|---|---|---|---|
| 01 | 07/05/2013 | Mise à jour | | | | | |
| 00 | 26/03/2013 | Edition originale / First issue | | | | | |

CARTE 4 SORTIES TOR
RELAIS ELECTROMECANIQUES

MONITORING
PHOTOVOLTAIQUE
CASINO LOT 5
PTR

Schneider Electric

ABE00014

| Projet - No commande Project - Order No. | Indice Rev | Folio Sheet |
|---|---|---|
| FR-7000166 | 01 | 060 |

A3 suite - 01/2008

The technical information contained in this document is the exclusive property of Schneider Electric Industries S.A.S and cannot be used or disclosed to third parties of any kind without its written consent. Only those drawings and diagrams marked "approved for construction" are to be used for the purpose of building or wiring. All devices shown in the drawings are in open position, drawn out with operating mechanism discharged and all power sources off.

Les informations techniques contenues dans ce document sont la propriete exclusive de Schneider Electric Industries S.A.S et ne peuvent etre utilisees ou divulguees a des tiers quels qu'ils soient sans son accord ecrit. Seuls nous engagent pour construire les dessins marqués "construction". Les appareils sur les schémas sont en position ouvert - désarmés - débrochés - toutes sources coupées.

| INV1 | INV2 | INV3 | INV4 | | | | |
|---|---|---|---|---|---|---|---|
| DISJ ARRIVEES AB | DISJ ARRIVEES AB | DISJ ARRIVEES AB | DISJ ARRIVEES AB | | | | |

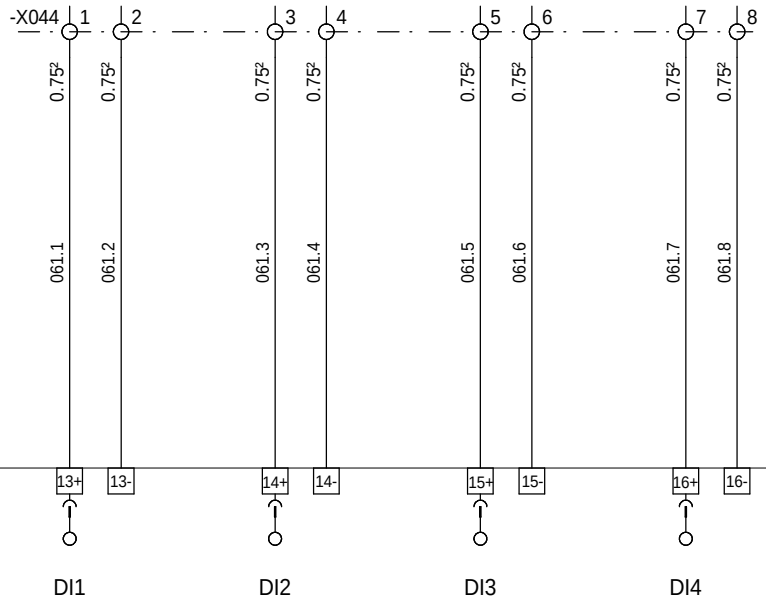


-A044 =S= TELECONTROL 0RIO1 04DI MODULE : 2

=N201
+AP01

The technical information contained in this document is the exclusive property of Schneider Electric Industries S.A.S and cannot be used or disclosed to third parties of any kind without its written consent. Only those drawings and documents certified for construction by the Schneider Electric Industries S.A.S are valid. All devices shown in the drawings are in open position, drawn out with operating mechanism discharged and all power sources off.

Les informations techniques contenues dans ce document sont la propriete exclusive de Schneider Electric Industries S.A.S et ne peuvent etre utilisees ou divulguees a des tiers quels qu'ils soient sans son accord ecrit. Seuls nous engagent les plans ayant fait l'objet d'une validation par Schneider Electric Industries S.A.S. Les appareils representes sur ce schéma sont en position ouvert - désarmés - débrochés - toutes sources coupées.

| Ind. Rev | Date Date | Modification / Modification | Archiv. Micro-filmed | Ind. Rev | Date Date | Modification / Modification | Archiv. Micro-filmed |
|---|---|---|---|---|---|---|---|
| 02 | 17/05/2013 | Mise à jour carte automate | | | | | |
| 01 | 07/05/2013 | Mise à jour | | | | | |
| 00 | 26/03/2013 | Edition originale / First issue | | | | | |

CARTE 4 ENTREES TOR

MONITORING
PHOTOVOLTAIQUE
CASINO LOT 5
PTR

Schneider Electric

ABE00014

Projet - No commande / Project - Order No.: FR-7000166

Indice / Rev: 02

Folio / Sheet: 061

A3 suite - 01/2008

The technical information contained in this document is the exclusive property of Schneider Electric Industries S.A.S and cannot be used / or disclosed to third parties of any kind without its written consent. Only those drawings and documents marked "for construction" are approved for construction. All devices shown in the drawings are in open position, drawn out with operating mechanism discharged and all power sources off.

Les informations techniques contenues dans ce document sont la propriete exclusive de Schneider Electric Industries S.A.S et ne peuvent etre utilisees ou divulguees a des tiers quels qu'ils soient sans son accord ecrit. Seuls nous engagent pour construire les dessins marqués "pour construire". Les appareils montrés dans les dessins sont en position ouvert - désarmés - débrochés - toutes sources coupées.

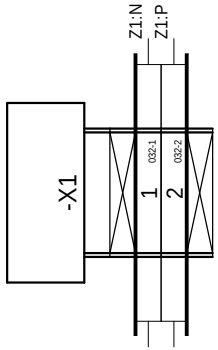


=N201
+AP01

| Ind. Rev | Date Date | Modification / Modification | Archiv. Micro-filmed | Ind. Rev | Date Date | Modification / Modification | Archiv. Micro-filmed |
|---|---|---|---|---|---|---|---|
| 00 | 26/03/2013 | Edition originale / First issue | | | | | |

BORNIER : =N201+AP01-X1

MONITORING
PHOTOVOLTAIQUE
CASINO LOT 5
PTR

Schneider Electric

ABE00014

| Projet - No commande / Project - Order No. | Indice / Rev | Folio / Sheet |
|---|---|---|
| FR-7000166 | 00 | 150 |

A3 suite - 01/2008

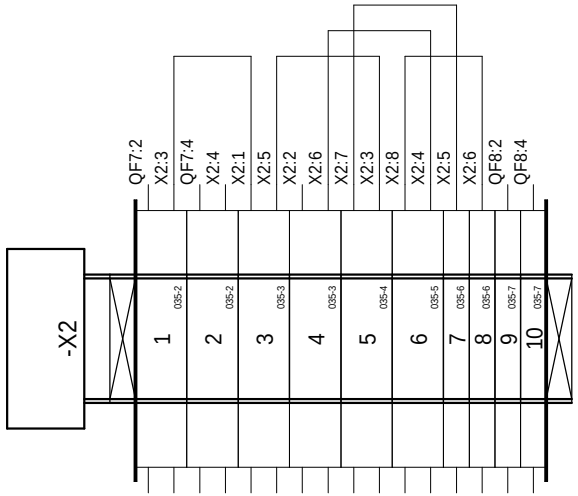


The technical information contained in this document is the exclusive property of Schneider Electric Industries S.A.S and cannot be used or disclosed to third parties of any kind without its written consent. Only those drawings and documents marked "for construction" or "for approval" may be used for the purpose of building the equipment. All devices shown in the drawings are in open position, drawn out with operating mechanism discharged and all power sources off.

Les informations techniques contenues dans ce document sont la propriete exclusive de Schneider Electric Industries S.A.S et ne peuvent etre utilisees ou divulguees a des tiers quels qu'ils soient sans son accord ecrit. Seuls nous engagent pour construire les plans et documents marqués "pour construire" et "pour approbation". Les appareils représentés sur ce schéma sont en position ouvert - désarmés - débrochés - toutes sources coupées.

=N201
+AP01

| Ind. Rev | Date Date | Modification / Modification | Archiv. Micro-filmed | Ind. Rev | Date Date | Modification / Modification | Archiv. Micro-filmed |
|---|---|---|---|---|---|---|---|
| 00 | 26/03/2013 | Edition originale / First issue | | | | | |

BORNIER : =N201+AP01-X2

MONITORING
PHOTOVOLTAIQUE
CASINO LOT 5
PTR

Schneider Electric

ABE00014

| Projet - No commande / Project - Order No. | Indice / Rev | Folio / Sheet |
|---|---|---|
| FR-7000166 | 00 | 151 |

A3 suite - 01/2008

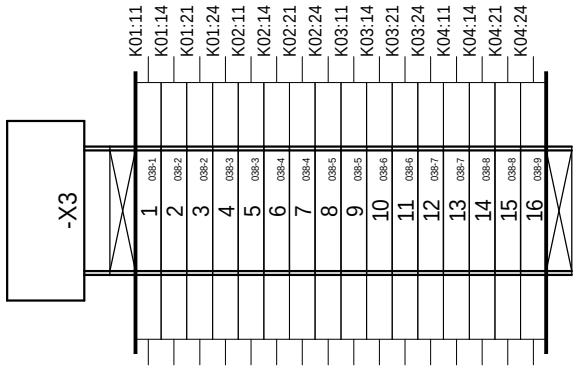


The technical information contained in this document is the exclusive property of Schneider Electric Industries S.A.S and cannot be used or disclosed to third parties of any kind without its written consent. Only those drawings and documents marked "Approved for construction" or "Approved for order" are valid. All devices shown in this drawing are in open position, drawn out with operating mechanism discharged and all power sources off.

Les informations techniques contenues dans ce document sont la propriete exclusive de Schneider Electric Industries S.A.S et ne peuvent etre utilisees ou divulguees a des tiers quels qu'ils soient sans son accord ecrit. Seuls nous engagent les documents marqués "Approuvé pour construire" ou "Approuvé pour commande". Les appareils représentés sur ce schéma sont en position ouvert - désarmés - débrochés - toutes sources coupées.

=N201
+AP01

| Ind. Rev | Date Date | Modification / Modification | Archiv. Micro-filmed | Ind. Rev | Date Date | Modification / Modification | Archiv. Micro-filmed |
|---|---|---|---|---|---|---|---|
| 00 | 26/03/2013 | Edition originale / First issue | | | | | |

BORNIER : =N201+AP01-X3

MONITORING
PHOTOVOLTAIQUE
CASINO LOT 5
PTR

Schneider Electric

ABE00014

| Projet - No commande / Project - Order No. | Indice / Rev | Folio / Sheet |
|---|---|---|
| FR-7000166 | 00 | 152 |

A3 suite - 01/2008

The technical information contained in this document is the exclusive property of Schneider Electric Industries S.A.S and cannot be used / or disclosed to third parties of any kind without its written consent. Only those drawings and documents marked "Approved for construction" or "Approved for order" are valid. All devices shown in the drawings are in open position, drawn out with operating mechanism discharged and all power sources off.

Les informations techniques contenues dans ce document sont la propriete exclusive de Schneider Electric Industries S.A.S et ne peuvent etre utilisees ou divulguees a des tiers quels qu'ils soient sans son accord ecrit. Seuls nous engagent pour construire les plans et schemas marqués "construction" ou "commande". Les appareils montrés sur les dessins sont en position ouvert - désarmés - débrochés - toutes sources coupées.

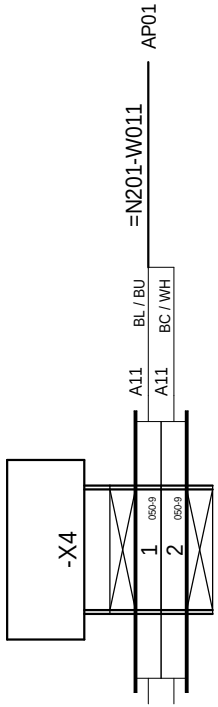


=N201
+AP01

| Ind. Rev | Date Date | Modification / Modification | Archiv. Micro-filmed | Ind. Rev | Date Date | Modification / Modification | Archiv. Micro-filmed |
|---|---|---|---|---|---|---|---|
| 00 | 26/03/2013 | Edition originale / First issue | | | | | |

BORNIER : =N201+AP01-X4

MONITORING
PHOTOVOLTAIQUE
CASINO LOT 5
PTR

Schneider Electric

ABE00014

| Projet - No commande / Project - Order No. | Indice / Rev | Folio / Sheet |
|---|---|---|
| FR-7000166 | 00 | 153 |

A3 suite - 01/2008

The technical information contained in this document is the exclusive property of Schneider Electric Industries S.A.S and cannot be used or disclosed to third parties of any kind without its written consent. Only those drawings and documents marked "for construction" are provided for construction purposes. All devices shown in this drawing are in open position, drawn out with operating mechanism discharged and all power sources off.

Les informations techniques contenues dans ce document sont la propriete exclusive de Schneider Electric Industries S.A.S et ne peuvent etre utilisees ou divulguees a des tiers quels qu'ils soient sans son accord ecrit. Seuls nous engagent les plans portant la mention "pour construction". Les appareils montrés dans ce schéma sont en position ouvert - désarmés - débrochés - toutes sources coupées.

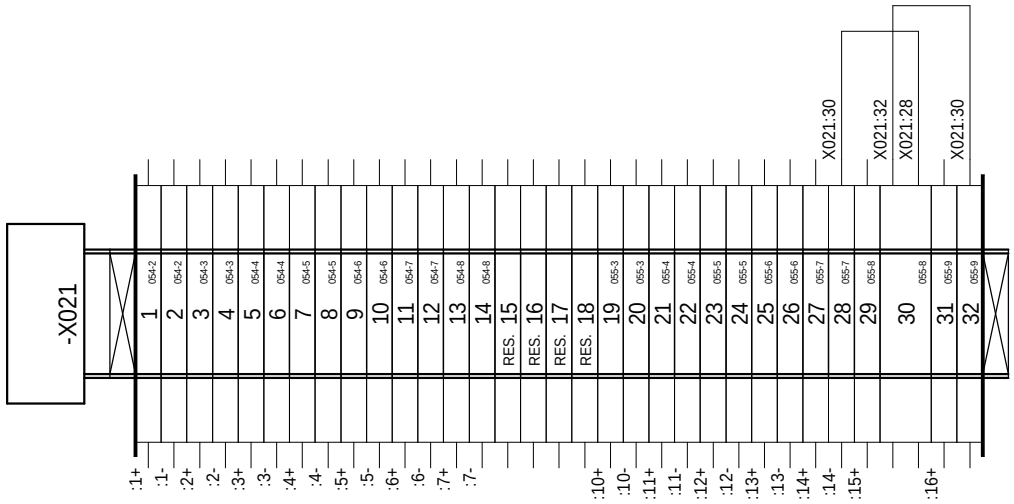


=N201
+AP01

| Ind. Rev | Date Date | Modification / Modification | Archiv. Micro-filmed | Ind. Rev | Date Date | Modification / Modification | Archiv. Micro-filmed |
|---|---|---|---|---|---|---|---|
| 00 | 26/03/2013 | Edition originale / First issue | | | | | |

BORNIER : =N201+AP01-X021

MONITORING
PHOTOVOLTAIQUE
CASINO LOT 5
PTR

Schneider Electric

| Projet - No commande / Project - Order No. | Indice Rev | Folio Sheet |
|---|---|---|
| ABE00014 / FR-7000166 | 00 | 154 |

A3 suite - 01/2008

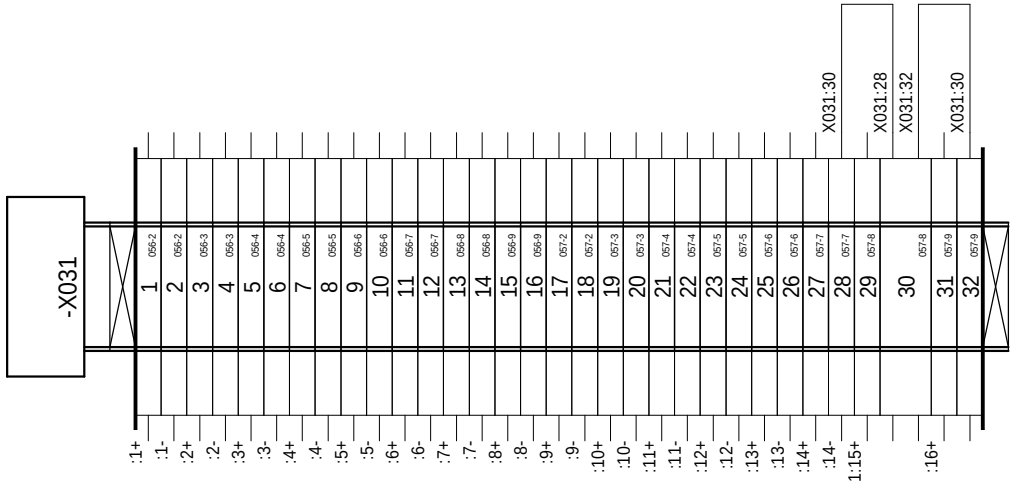


The technical information contained in this document is the exclusive property of Schneider Electric Industries S.A.S and cannot be used or disclosed to third parties of any kind without its written consent. Only those drawings and documents marked "Approved for construction" are provided to third parties for construction. All devices shown in the drawings are in open position, drawn out with operating mechanism discharged and all power sources off.

Les informations techniques contenues dans ce document sont la propriete exclusive de Schneider Electric Industries S.A.S et ne peuvent etre utilisees ou divulguees a des tiers quels qu'ils soient sans son accord ecrit. Seuls nous engagent pour construire les dessins marqués "Approuve pour construction". Les appareils montrés sur ce schéma sont en position ouvert - désarmés - débrochés - toutes sources coupées.

=N201
+AP01

| Ind. Rev | Date Date | Modification / Modification | Archiv. Micro-filmed | Ind. Rev | Date Date | Modification / Modification | Archiv. Micro-filmed |
|---|---|---|---|---|---|---|---|
| 00 | 26/03/2013 | Edition originale / First issue | | | | | |

BORNIER : =N201+AP01-X031

MONITORING
PHOTOVOLTAIQUE
CASINO LOT 5
PTR

Schneider Electric

ABE00014

| Projet - No commande / Project - Order No. | Indice / Rev | Folio / Sheet |
|---|---|---|
| FR-7000166 | 00 | 155 |

A3 suite - 01/2008

The technical information contained in this document is the exclusive property of Schneider Electric Industries S.A.S and cannot be used or disclosed to third parties of any kind without its written consent. Only those drawings and documents received after order confirmation are binding (for execution). All devices shown in the drawings are in open position, drawn out with operating mechanism discharged and all power sources off.

Les informations techniques contenues dans ce document sont la propriete exclusive de Schneider Electric Industries S.A.S et ne peuvent etre utilisees ou divulguees a des tiers quels qu'ils soient sans son accord ecrit. Seuls nous engagent les documents recus apres confirmation de commande. Les appareils montres dans les documents sur ce schéma sont en position ouvert - désarmés - débrochés - toutes sources coupées.

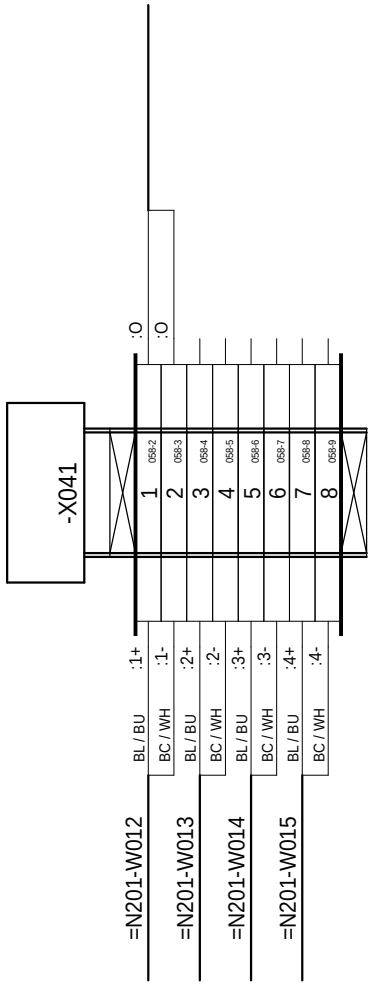


=N201
+AP01

| Ind. Rev | Date Date | Modification / Modification | Archiv. Micro-filmed | Ind. Rev | Date Date | Modification / Modification | Archiv. Micro-filmed |
|---|---|---|---|---|---|---|---|
| 00 | 26/03/2013 | Edition originale / First issue | | | | | |

BORNIER : =N201+AP01-X041

MONITORING
PHOTOVOLTAIQUE
CASINO LOT 5
PTR

Schneider Electric

ABE00014

| Projet - No commande / Project - Order No. | Indice / Rev | Folio / Sheet |
|---|---|---|
| FR-7000166 | 00 | 156 |

A3 suite - 01/2008

The technical information contained in this document is the exclusive property of Schneider Electric Industries S.A.S and cannot be used or disclosed to third parties of any kind without its written consent. Only those drawings and documents mentioned in orders are binding for execution. All devices shown in the drawings are in open position, drawn out with operating mechanism discharged and all power sources off.

Les informations techniques contenues dans ce document sont la propriete exclusive de Schneider Electric Industries S.A.S et ne peuvent etre utilisees ou divulguees a des tiers quels qu'ils soient sans son accord ecrit. Seuls nous engagent les documents mentionnes dans les commandes. Les appareils representes sur ce schéma sont en position ouvert - désarmés - débrochés - toutes sources coupées.

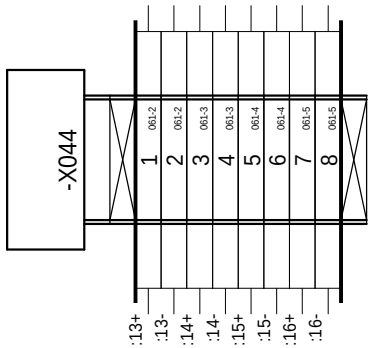


=N201
+AP01

| Ind. Rev | Date Date | Modification / Modification | Archiv. Micro-filmed | Ind. Rev | Date Date | Modification / Modification | Archiv. Micro-filmed |
|---|---|---|---|---|---|---|---|
| 00 | 26/03/2013 | Edition originale / First issue | | | | | |

BORNIER : =N201+AP01-X044

MONITORING
PHOTOVOLTAIQUE
CASINO LOT 5
PTR

Schneider Electric

ABE00014

| Projet - No commande / Project - Order No. | Indice / Rev | Folio / Sheet |
|---|---|---|
| FR-7000166 | 00 | 157 |

A3 suite - 01/2008

| Localisation (Location) | Installation (Function) | Repère (Tag) | Page (Sheet) | Designation | Fabricant (Manufacturer) | Ref. fabricant (Manufacturer Ref.) |
|---|---|---|---|---|---|---|
| AP01 | N201 | A01 | 052 | ALIMENTATION BOITIER CPU PHENIX / CPU PHENIX POWER SUPPLY UNIT | =S= TELECONTROL | 0RIO2 UPS-2 |
| | | A02 | 052 | BOITIER EXT-2, 1 EMPLACEMENT CARTE T2 / EXT-2 UNIT, 1 T2 BOARD SLOT | =S= TELECONTROL | 0RIO2 EXT-2 |
| | | A03 | 052 | BOITIER EXT-2, 1 EMPLACEMENT CARTE T2 / EXT-2 UNIT, 1 T2 BOARD SLOT | =S= TELECONTROL | 0RIO2 EXT-2 |
| | | A04 | 052 | BOITIER EXT-1, 4 EMPLACEMENTS CARTES T1 / EXT-1 UNIT, 4 T1 BOARDS SLOTS | =S= TELECONTROL | 0RIO2 EXT-1 |
| | | A11 | 050 | PC DE TELEGESTION UNO-1170E AVEC CARTE EXT. RS485 / UNO-1170E REMOTE MANAGEMENT PC WITH RS485 EXPANSION PC | ADVANTECH | 0ACC0000 |
| | | A021 | 052 | CARTE 16 ENTREES LOGIQUES ET COMPTAGES, T2 / 16 SELF-POWERED DIGITAL AND COUNTING INPUTS BOARD, T2 | =S= TELECONTROL | 0RIO2 16DI |
| | | A031 | 052 | CARTE 16 ENTREES LOGIQUES ET COMPTAGES, T2 / 16 SELF-POWERED DIGITAL AND COUNTING INPUTS BOARD, T2 | =S= TELECONTROL | 0RIO2 16DI |
| | | A041 | 052 | CARTE 4 ENTREES ANALOGIQUES UNIVERSELLES, T1 / 4 UNIVERSAL ANALOG INPUTS BOARD, T1 | =S= TELECONTROL | 0RIO1 04AI |
| | | A042 | 052 | CARTE 4 SORTIES LOGIQUES RELAIS ELECTROMECANIQUE, T1 / 4 ELECTROMECHANICAL RELAYS DIGITAL OUTPUTS BOARD, T1 | =S= TELECONTROL | 0RIO1 04DO |
| | | A043 | 052 | CARTE 4 SORTIES LOGIQUES RELAIS ELECTROMECANIQUE, T1 / 4 ELECTROMECHANICAL RELAYS DIGITAL OUTPUTS BOARD, T1 | =S= TELECONTROL | 0RIO1 04DO |
| | | A044 | 052 | CARTE 4 ENTREES LOGIQUES TOR, T1 / 4 SELF-POWERED DIGITAL INPUTS BOAR, T1 | =S= TELECONTROL | 0RIO1 04DI |
| | | F1.1 | 040 | FICHE PARAFOUDRE HF 3 F-In:10kA (8/20)-Uc:13VCC / HF LIGHTNING ARRESTER PLUG 3 W-In:10kA (8/20)-Uc:13VDC | PHOENIX CONTACT | 2858043 |
| | | | 040 | EMBASE PARAFOUDRE AVEC DECOUPLAGE ECRAN/MASSE / LIGHTNING ARRESTER SUPPORT WITH SHIELD/EXPOSED CONDUCTIVE PART | PHOENIX CONTACT | 2856126 |
| | | | 040 | RACCORDEMENT AUTODENUDANT POUR BLINDAGE DIAMETRE 3-6mm / SELF-STRIPPER CONNECTION FOR SHIELD DIAMETER 3-6 mm | PHOENIX CONTACT | 2839295 |
| | | F1.2 | 040 | FICHE PARAFOUDRE HF 3 F-In:10kA (8/20)-Uc:13VCC / HF LIGHTNING ARRESTER PLUG 3 W-In:10kA (8/20)-Uc:13VDC | PHOENIX CONTACT | 2858043 |
| | | | 040 | EMBASE PARAFOUDRE AVEC DECOUPLAGE ECRAN/MASSE / LIGHTNING ARRESTER SUPPORT WITH SHIELD/EXPOSED CONDUCTIVE PART | PHOENIX CONTACT | 2856126 |
| | | | 040 | RACCORDEMENT AUTODENUDANT POUR BLINDAGE DIAMETRE 3-6mm / SELF-STRIPPER CONNECTION FOR SHIELD DIAMETER 3-6 mm | PHOENIX CONTACT | 2839295 |
| | | F1.3 | 041 | FICHE PARAFOUDRE HF 3 F-In:10kA (8/20)-Uc:13VCC / HF LIGHTNING ARRESTER PLUG 3 W-In:10kA (8/20)-Uc:13VDC | PHOENIX CONTACT | 2858043 |
| | | | 041 | EMBASE PARAFOUDRE AVEC DECOUPLAGE ECRAN/MASSE / LIGHTNING ARRESTER SUPPORT WITH SHIELD/EXPOSED CONDUCTIVE PART | PHOENIX CONTACT | 2856126 |
| | | | 041 | RACCORDEMENT AUTODENUDANT POUR BLINDAGE DIAMETRE 3-6mm / SELF-STRIPPER CONNECTION FOR SHIELD DIAMETER 3-6 mm | PHOENIX CONTACT | 2839295 |
| | | F1.4 | 041 | FICHE PARAFOUDRE HF 3 F-In:10kA (8/20)-Uc:13VCC / HF LIGHTNING ARRESTER PLUG 3 W-In:10kA (8/20)-Uc:13VDC | PHOENIX CONTACT | 2858043 |
| | | | 041 | EMBASE PARAFOUDRE AVEC DECOUPLAGE ECRAN/MASSE / LIGHTNING ARRESTER SUPPORT WITH SHIELD/EXPOSED CONDUCTIVE PART | PHOENIX CONTACT | 2856126 |
| | | | 041 | RACCORDEMENT AUTODENUDANT POUR BLINDAGE DIAMETRE 3-6mm / SELF-STRIPPER CONNECTION FOR SHIELD DIAMETER 3-6 mm | PHOENIX CONTACT | 2839295 |
| | | F1.5 | 042 | FICHE PARAFOUDRE HF 3 F-In:10kA (8/20)-Uc:13VCC / HF LIGHTNING ARRESTER PLUG 3 W-In:10kA (8/20)-Uc:13VDC | PHOENIX CONTACT | 2858043 |
| | | | 042 | EMBASE PARAFOUDRE AVEC DECOUPLAGE ECRAN/MASSE / LIGHTNING ARRESTER SUPPORT WITH SHIELD/EXPOSED CONDUCTIVE PART | PHOENIX CONTACT | 2856126 |
| | | | 042 | RACCORDEMENT AUTODENUDANT POUR BLINDAGE DIAMETRE 3-6mm / SELF-STRIPPER CONNECTION FOR SHIELD DIAMETER 3-6 mm | PHOENIX CONTACT | 2839295 |
| | | K01 | 059 | RELAIS BISTABLE AVEC DIODE 24VDC 4INV / LATCHING RELAY WITH SUPPRESSOR , 24 V DC, 4OC | TELEMECANIQUE | RHK412BA76 |
| | | | 059 | EMBASE AVANT VIS / SCREW BASE PLATE | TELEMECANIQUE | RHZ21 |
| | | | 059 | ETRIER METALLIQUE DE MAINTIEN / METAL CLAMP | TELEMECANIQUE | RXZ 400 |
| | | K02 | 059 | RELAIS BISTABLE AVEC DIODE 24VDC 4INV / LATCHING RELAY WITH SUPPRESSOR , 24 V DC, 4OC | TELEMECANIQUE | RHK412BA76 |
| | | | 059 | EMBASE AVANT VIS / SCREW BASE PLATE | TELEMECANIQUE | RHZ21 |
| | | | 059 | ETRIER METALLIQUE DE MAINTIEN / METAL CLAMP | TELEMECANIQUE | RXZ 400 |
| | | K03 | 060 | RELAIS BISTABLE AVEC DIODE 24VDC 4INV / LATCHING RELAY WITH SUPPRESSOR , 24 V DC, 4OC | TELEMECANIQUE | RHK412BA76 |
| | | | 060 | EMBASE AVANT VIS / SCREW BASE PLATE | TELEMECANIQUE | RHZ21 |
| | | | 060 | ETRIER METALLIQUE DE MAINTIEN / METAL CLAMP | TELEMECANIQUE | RXZ 400 |
| | | K04 | 060 | RELAIS BISTABLE AVEC DIODE 24VDC 4INV / LATCHING RELAY WITH SUPPRESSOR , 24 V DC, 4OC | TELEMECANIQUE | RHK412BA76 |
| | | | 060 | EMBASE AVANT VIS / SCREW BASE PLATE | TELEMECANIQUE | RHZ21 |
| | | | 060 | ETRIER METALLIQUE DE MAINTIEN / METAL CLAMP | TELEMECANIQUE | RXZ 400 |
| | | QF1 | 032 | INTER I BI 20A SANS VOYANT / SWITCH-DISCONNECTOR I, 2P, 20 A | MERLIN GERIN | 15006 |
| | | QF2 | 034 | DISJONCTEUR C60H-DC BI 1 A COURBE C / MINIATURE CIRCUIT BREAKER MULTI 9, C60H-DC, 2 POLES, 2 A, C CURVE | MERLIN GERIN | MGN61521 |
| | | | 034 | CONTACT OF+SD/OF / AUxILIARY CONTACT, 1 OC + 1 SD/OC | MERLIN GERIN | 26929 |
| | | QF4 | 034 | DISJONCTEUR C60H-DC BI 1 A COURBE C / MINIATURE CIRCUIT BREAKER MULTI 9, C60H-DC, 2 POLES, 2 A, C CURVE | MERLIN GERIN | MGN61521 |
| | | | 034 | CONTACT OF+SD/OF / AUxILIARY CONTACT, 1 OC + 1 SD/OC | MERLIN GERIN | 26929 |
| | | QF5 | 034 | DISJONCTEUR C60H-DC BI 1 A COURBE C / MINIATURE CIRCUIT BREAKER MULTI 9, C60H-DC, 2 POLES, 2 A, C CURVE | MERLIN GERIN | MGN61521 |
| | | | 034 | CONTACT OF+SD/OF / AUxILIARY CONTACT, 1 OC + 1 SD/OC | MERLIN GERIN | 26929 |
| | | QF6 | 034 | DISJONCTEUR C60H-DC BI 1 A COURBE C / MINIATURE CIRCUIT BREAKER MULTI 9, C60H-DC, 2 POLES, 2 A, C CURVE | MERLIN GERIN | MGN61521 |
| | | QF7 | 035 | DISJONCTEUR C60H-DC BI 2 A COURBE C / MINIATURE CIRCUIT BREAKER MULTI 9, C60H-DC, 2 POLES, 2 A, C CURVE | MERLIN GERIN | MGN61522 |
| | | | 035 | CONTACT OF+SD/OF / AUxILIARY CONTACT, 1 OC + 1 SD/OC | MERLIN GERIN | 26929 |
| | | QF8 | 035 | DISJONCTEUR C60H-DC BI 1 A COURBE C / MINIATURE CIRCUIT BREAKER MULTI 9, C60H-DC, 2 POLES, 2 A, C CURVE | MERLIN GERIN | MGN61521 |
| | | QF3.1 | 034 | DISJONCTEUR C60H-DC BI 1 A COURBE C / MINIATURE CIRCUIT BREAKER MULTI 9, C60H-DC, 2 POLES, 2 A, C CURVE | MERLIN GERIN | MGN61521 |

The technical information contained in this document is the exclusive property of Schneider Electric Industries S.A.S and cannot be used or disclosed to third parties of any kind without its written consent. Only those drawings and diagrams marked "Certified drawing" are approved. All devices shown in the diagrams are in open position, drawn out with operating mechanism discharged and all power sources off.

Les informations techniques contenues dans ce document sont la propriete exclusive de Schneider Electric Industries S.A.S et ne peuvent etre utilisees ou divulguees a des tiers quels qu'ils soient sans son accord ecrit. Seuls nous engagent les plans portant la mention "plan certifie". Les appareils representes sur ce schéma sont en position ouvert - désarmés - débrochés - toutes sources coupées.

| Ind. Rev | Date Date | Modification / Modification | Archiv. Micro-filmed | Ind. Rev | Date Date | Modification / Modification | Archiv. Micro-filmed |
|---|---|---|---|---|---|---|---|
| 02 | 17/05/2013 | Mise à jour carte automate | | | | | |
| 01 | 07/05/2013 | Mise à jour | | | | | |
| 00 | 26/03/2013 | Edition originale / First issue | | | | | |

NOMENCLATURE / PART LIST

MONITORING
PHOTOVOLTAIQUE
CASINO LOT 5
PTR

Schneider Electric

ABE00014

| Projet - No commande / Project - Order No. | Indice Rev | Folio Sheet |
|---|---|---|
| FR-7000166 | 02 | 200 |

A3 suite - 11/2006

| Nom composant / Component name: Localisation (Location) / Installation (Function) / Repère (Tag) | Page (Sheet) | Designation | Fabricant (Manufacturer) | Ref. fabricant (Manufacturer Ref.) |
|---|---|---|---|---|
| QF3.2 | 034 | DISJONCTEUR C60H-DC BI 2 A COURBE C / MINIATURE CIRCUIT BREAKER MULTI 9, C60H-DC, 2 POLES, 2 A, C CURVE | MERLIN GERIN | MGN61522 |
| U1 | 033 | ALIMENTATION REGULEE A DECOUP. MONO 100...240VAC/24VDC 240W / UNIVERSAL POWER SUPPLY 1P 24V 10A | TELEMECANIQUE | ABL8RPS24100 |
| U2 | 045 | SWITCH ETHERNET 6 PORTS 10/100 TX ET 2 PORTS 100 FX-MM / CONNEXIUM MANAGED SWITCH 6TX/2FX-MM | TELEMECANIQUE | TCSESM083F2CU0 |
| U3.1 | 040 | ISOLATEUR DE LIGNE RS485 / RS485 LINK INSULATOR | ETIC | SI485 |
| U3.2 | 040 | ISOLATEUR DE LIGNE RS485 / RS485 LINK INSULATOR | ETIC | SI485 |
| U3.3 | 041 | ISOLATEUR DE LIGNE RS485 / RS485 LINK INSULATOR | ETIC | SI485 |
| U3.4 | 041 | ISOLATEUR DE LIGNE RS485 / RS485 LINK INSULATOR | ETIC | SI485 |
| U3.5 | 042 | ISOLATEUR DE LIGNE RS485 / RS485 LINK INSULATOR | ETIC | SI485 |
| W001 | 040 | CABLE 1 PAIRE TORSADEE BLINDEE / 1 SHIELDED TWISTED PAIR CABLE | BELDEN | 9841 |
| W002 | 040 | CABLE 1 PAIRE TORSADEE BLINDEE / 1 SHIELDED TWISTED PAIR CABLE | BELDEN | 9841 |
| W003 | 040 | CABLE 1 PAIRE TORSADEE BLINDEE / 1 SHIELDED TWISTED PAIR CABLE | BELDEN | 9841 |
| W004 | 040 | CABLE 1 PAIRE TORSADEE BLINDEE / 1 SHIELDED TWISTED PAIR CABLE | BELDEN | 9841 |
| W005 | 041 | CABLE 1 PAIRE TORSADEE BLINDEE / 1 SHIELDED TWISTED PAIR CABLE | BELDEN | 9841 |
| W006 | 041 | CABLE 1 PAIRE TORSADEE BLINDEE / 1 SHIELDED TWISTED PAIR CABLE | BELDEN | 9841 |
| W007 | 041 | CABLE 1 PAIRE TORSADEE BLINDEE / 1 SHIELDED TWISTED PAIR CABLE | BELDEN | 9841 |
| W008 | 041 | CABLE 1 PAIRE TORSADEE BLINDEE / 1 SHIELDED TWISTED PAIR CABLE | BELDEN | 9841 |
| W009 | 042 | CABLE 1 PAIRE TORSADEE BLINDEE / 1 SHIELDED TWISTED PAIR CABLE | BELDEN | 9841 |
| W010 | 042 | CABLE 1 PAIRE TORSADEE BLINDEE / 1 SHIELDED TWISTED PAIR CABLE | BELDEN | 9841 |
| W011 | 050 | CABLE 1 PAIRE TORSADEE BLINDEE / 1 SHIELDED TWISTED PAIR CABLE | BELDEN | 9841 |
| W012 | 058 | CABLE 1 PAIRE TORSADEE BLINDEE / 1 SHIELDED TWISTED PAIR CABLE | BELDEN | 9841 |
| W013 | 058 | CABLE 1 PAIRE TORSADEE BLINDEE / 1 SHIELDED TWISTED PAIR CABLE | BELDEN | 9841 |
| W014 | 058 | CABLE 1 PAIRE TORSADEE BLINDEE / 1 SHIELDED TWISTED PAIR CABLE | BELDEN | 9841 |
| W015 | 058 | CABLE 1 PAIRE TORSADEE BLINDEE / 1 SHIELDED TWISTED PAIR CABLE | BELDEN | 9841 |
| WCOM001 | 050 | CABLE 2 PAIRES TORSADEES BLINDEES / 2 SHIELDED TWISTED PAIRS CABLE | BELDEN | 9842 |
| WET001 | 045 | CORDON RESEAU ETH. BLINDE, CAT. 5, PAIRE TORS. DROIT 2M / SHIELDED ETH. NETWORK CORD, CL. 5, TWISTED PAIR 2M | SCHNEIDER | 490 NTW 000 02 |
| WO001 | 044 | CORDON ZIPCORD SC-PC/SC-PC 6FO MM 50/125µm 2.8mm, 2m / ZIPCORD CORD SC-PC/SC-PC 6FO MM 50/125µm 2.8mm, 2m | ICTL | 502102221N |
| WO002 | 044 | CORDON ZIPCORD SC-PC/SC-PC 6FO MM 50/125µm 2.8mm, 2m / ZIPCORD CORD SC-PC/SC-PC 6FO MM 50/125µm 2.8mm, 2m | ICTL | 502102221N |
| X1 | | BLOC DE JONCTION A VIS 2.5mm2, GRIS / SCREW TERMINAL BLOCK 2.5mm², GREY | PHOENIX CONTACT | 3001501 |
| | | COUVERCLE / COVER | PHOENIX CONTACT | 3003020 |
| X2 | | BLOC DE JONCTION A VIS 2.5mm2, GRIS / SCREW TERMINAL BLOCK 2.5mm², GREY | PHOENIX CONTACT | 3001501 |
| | | COUVERCLE / COVER | PHOENIX CONTACT | 3003020 |
| X3 | | BLOC DE JONCTION A VIS 2.5mm2, GRIS / SCREW TERMINAL BLOCK 2.5mm², GREY | PHOENIX CONTACT | 3001501 |
| | | COUVERCLE / COVER | PHOENIX CONTACT | 3003020 |
| X4 | | BLOC DE JONCTION A VIS 2.5mm2, GRIS / SCREW TERMINAL BLOCK 2.5mm², GREY | PHOENIX CONTACT | 3001501 |
| | | COUVERCLE / COVER | PHOENIX CONTACT | 3003020 |
| X021 | | BLOC DE JONCTION A VIS 2.5mm2, GRIS / SCREW TERMINAL BLOCK 2.5mm², GREY | PHOENIX CONTACT | 3001501 |
| | | COUVERCLE / COVER | PHOENIX CONTACT | 3003020 |
| X031 | | BLOC DE JONCTION A VIS 2.5mm2, GRIS / SCREW TERMINAL BLOCK 2.5mm², GREY | PHOENIX CONTACT | 3001501 |
| | | COUVERCLE / COVER | PHOENIX CONTACT | 3003020 |
| X041 | | BLOC DE JONCTION A VIS 2.5mm2, GRIS / SCREW TERMINAL BLOCK 2.5mm², GREY | PHOENIX CONTACT | 3001501 |
| | | COUVERCLE / COVER | PHOENIX CONTACT | 3003020 |
| X044 | | BLOC DE JONCTION A VIS 2.5mm2, GRIS / SCREW TERMINAL BLOCK 2.5mm², GREY | PHOENIX CONTACT | 3001501 |
| | | COUVERCLE / COVER | PHOENIX CONTACT | 3003020 |
| XFO1 | 044 | COFFRET FIDJI V2 FOLAN 12SC (12 SC PC SLEEVE MULTIMODES) / FIDJI V2 FOLAN BOX 12SC (12 MULTIMODE SC PC SLEEVE) | ICTL | ZSPE |
| Z1 | 032 | FILTRE CEM HAUTE PERF., COURANT D'EMPLOI 3 A 16A / COMPACT PERF. EMI FILTER, DESIGN CURRENT 3 TO 16A | SCHAFFNER | FN 9675-6/06 |
| Z2 | 035 | FILTRE CEM HAUTE PERF., COURANT D'EMPLOI 1 A 10A / COMPACT PERF. EMI FILTER, DESIGN CURRENT 1 TO 10A | SCHAFFNER | FN 682-4/06 |

The technical information contained in this document is the exclusive property of Schneider Electric Industries S.A.S and cannot be used or disclosed to third parties of any kind without its written consent. Only those drawings and documents signed and dated under Schneider Electric Industries S.A.S control are valid. All devices shown in this document are in open position, drawn out with operating mechanism discharged and all power sources off.

Les informations techniques contenues dans ce document sont la propriete exclusive de Schneider Electric Industries S.A.S et ne peuvent etre utilisees ou divulguees a des tiers quels qu'ils soient sans son accord ecrit. Seuls nous engagent les documents signes et dates sous controle de Schneider Electric Industries S.A.S. Les appareils representes sur ce schéma sont en position ouvert - désarmés - débrochés - toutes sources coupées.

| Ind. Rev | Date Date | Modification / Modification | Archiv. Micro-filmed | Ind. Rev | Date Date | Modification / Modification | Archiv. Micro-filmed |
|---|---|---|---|---|---|---|---|
| 02 | 17/05/2013 | Mise à jour carte automate | | | | | |
| 01 | 07/05/2013 | Mise à jour | | | | | |
| 00 | 26/03/2013 | Edition originale / First issue | | | | | |

NOMENCLATURE / PART LIST

MONITORING
PHOTOVOLTAIQUE
CASINO LOT 5
PTR

Schneider Electric

ABE00014

| Projet - No commande / Project - Order No. | Indice / Rev | Folio / Sheet |
|---|---|---|
| FR-7000166 | 02 | 201 |

A3 suite - 11/2006