All technical information contained in this document is the exclusive property of SCHNEIDER ELECTRIC INDUSTRIES SA and may neither be used nor disclosed without its prior written consent. Only those drawings and diagrams remitted after order booking are binding for execution. All devices shown in this diagram are in open position, drawn out, with operating mechanisms discharged and all power sources off.

Les informations techniques contenues dans ce document sont la propriete exclusive de SCHNEIDER ELECTRIC INDUSTRIES SA et ne peuvent etre utilisees ou divulguees a des tiers quels qu'ils soient sans son accord ecrit. Seuls nous engagent pour execution les plans et schemas remis apres enregistrement de la commande. Les appareils representes sur ce schema sont en position ouvert desarmes – debroches – toutes sources coupees.

Ind rev	Date Date	Modification/Modification	Nom/name	Visa	Nom/name	Visa	Nom/name	Visa	Archiv. micro-filmed
02	06 05 10	Tel que construit	PEYRON		CHARPE		RIGONI		
01	13 01 10	MAJ F°20 et 31	VIANNEY		CHARPE		RIGONI		
00	03 12 09	Edition originale/First issue	VIANNEY		CHARPE		RIGONI		
			Dessine/drawn		Verifie/checked		Approuve/approved		

SCHEMA–IMPLANTATION–
NOMENCLATURE
ARMOIRE MONITORING
PTR3

–

JUMBO SCORE
SAVANNAH
CENTRALE
PHOTOVOLTAIQUE

–

Echelle
Scale
1 : 1

Unite/department
PM

Schneider Electric

Code diffusion
Distribution code

Project – Order No.
FPVPB1354

0297962100

Ind/rev 02

Folio/sheet 001/ .

Original AutoCAD format A3

Folio sheet	Designation/ Designation	Indice de modification Revision 00	01	02
001	SCHEMA–IMPLANTATION– NOMENCLATURE ARMOIRE MONITORING	X	X	X
002		X	X	X
005	LEGENDE SYMBOLES PRINCIPE DE REPERAGE	X		
007	MARQUAGE	X		
010	UNIFILAIRE GENERAL DE L'ARMOIRE	X		
015	IMPLANTATION MATERIEL	X		X
016	FIXATIONS AU SOL ARMOIRE	X		
020	DISTRIBUTION DES POLARITES 230VCA	X	X	X
021	DISTRIBUTION DES POLARITES 24VCC	X		
025	LIAISONS FIBRES OPTIQUES ET RESEAU ETHERNET	X		
026	LIAISONS RS485	X		X
027	ISOLATION GALVANIQUE RS485 PARAMETRAGES	X		
030	EXTENSION AUTOMATE PRESENTATION ALIMENTATION MODBUS	X		
031	AUTOMATE TELEGESTION CARTES E/S	X	X	X
033	AUTOMATE TELEGESTION CARTES E/S	X		

Folio sheet	Designation/ Designation	Indice de modification Revision 00	01	02
060	BORNIER X1	X		
061	BORNIER X2	X		
062	BORNIER X3	X		
063	BORNIER X4	X		X
070	NOMENCLATURE	X		X
071	NOMENCLATURE	X		X

All technical information contained in this document is the exclusive property of SCHNEIDER ELECTRIC INDUSTRIES SA and may neither be used nor disclosed without its prior written consent. Only those drawings and diagrams remitted after order booking are binding for execution. All devices shown in this diagram are in open position, drawn out, with operating mechanisms discharged and all power sources off.

Les informations techniques contenues dans ce document sont la propriete exclusive de SCHNEIDER ELECTRIC INDUSTRIES SA et ne peuvent etre utilisees ou divulguees a des tiers quels qu'ils soient sans son accord ecrit. Seuls nous engagent pour execution les plans et schemas remis apres enregistrement de la commande. Les appareils representes sur ce schema sont en position ouvert desarmes – debroches – toutes sources coupees.

Archivage
Microfilmed

Recapitulatif des folios et indices de modification
Page summary with modification indexes

JUMBO SCORE
SAVANNAH
CENTRALE
PHOTOVOLTAIQUE
—

Schneider Electric

0297962 100

Projet – No commande / Project – Order NO.	Ind/rev	Folio /sheet
FPVPB1354	02	002/ .

Original AutoCAD format A3

REPERAGE DANS LE SCHEMA

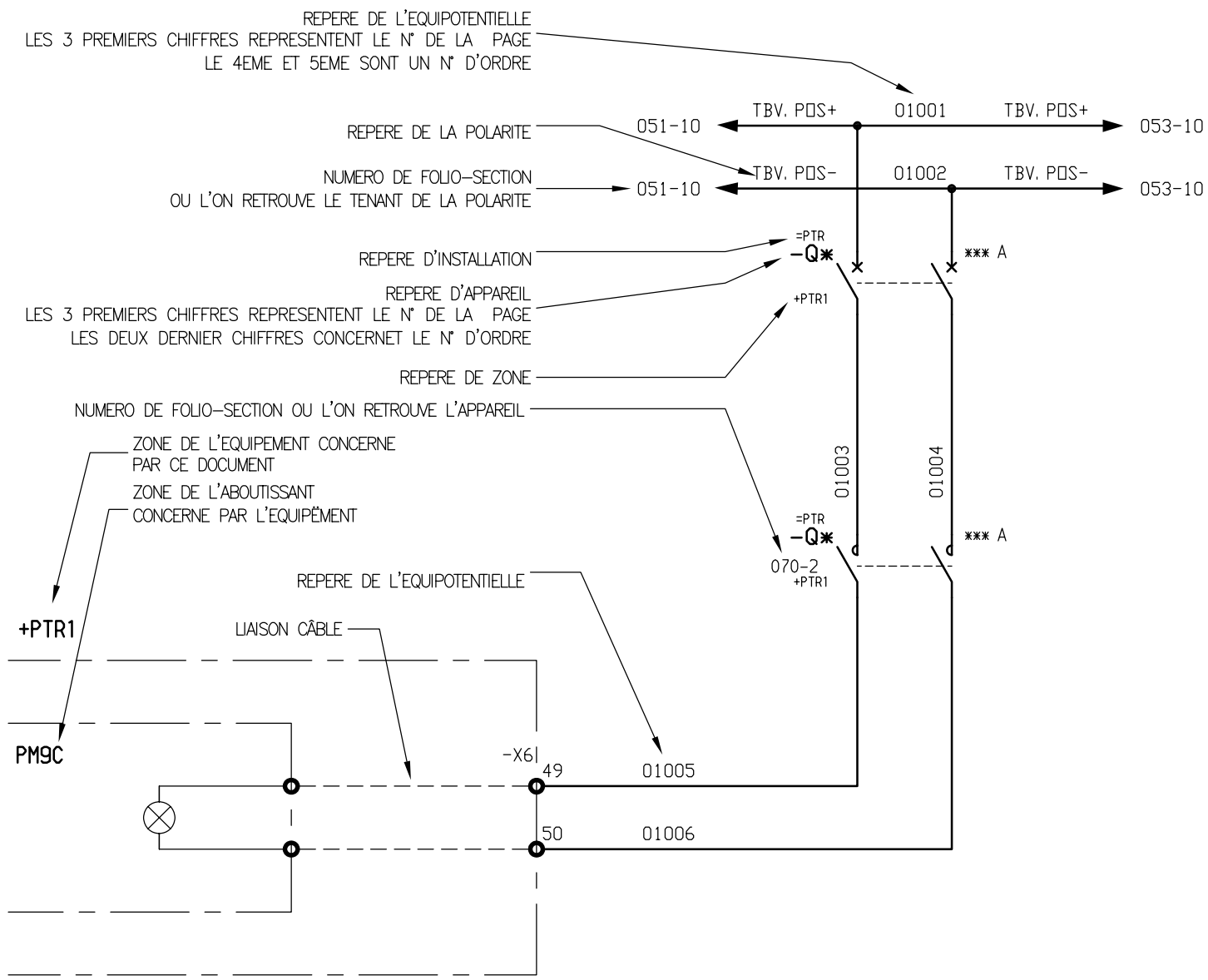

+PTR3

LA ZONE ET L'INSTALLATION PAR DEFAUT
SONT INDIQUEES EN BAS A GAUCHE DE CHAQUE FOLIO

Ind. rev	Date date	Modification/ Modification	Archiv. micro–filmed	Ind. rev	Date date	Modification/ Modification	Archiv. micro–filmed
00	16 12 09	Edition originale/ First issue					

LEGENDE SYMBOLES

PRINCIPE DE REPERAGE

JUMBO SCORE
SAVANNAH
CENTRALE
PHOTOVOLTAIQUE

Schneider Electric

0297962 100

Projet – No commande Project – Order NO.	Ind/rev	Folio /sheet
FPVPB1354	00	005/ .

Original AutoCAD format A3

All technical information contained in this document is the exclusive property of SCHNEIDER ELECTRIC INDUSTRIES SA and may neither be used nor disclosed without its prior written consent. Only those drawings and diagrams remitted after order booking are binding for execution. All devices shown in this diagram are in open position, drawn out, with operating mechanisms discharged and all power sources off.

Les informations techniques contenues dans ce document sont la propriete exclusive de SCHNEIDER ELECTRIC INDUSTRIES SA et ne peuvent etre utilisees ou divulguees a des tiers quels qu'ils soient sans son accord ecrit. Seuls nous engagent pour execution les plans et schemas remis apres enregistrement de la commande. Les appareils representes sur ce schema sont en position ouvert desarmes – debroches – toutes sources coupees.

All technical information contained in this document is the exclusive property of SCHNEIDER ELECTRIC INDUSTRIES SA and may neither be used nor disclosed without its prior written consent. Only those drawings and diagrams remitted after order booking are binding for execution. All devices shown in this diagram are in open position, drawn out, with operating mechanisms discharged and all power sources off.

Les informations techniques contenues dans ce document sont la propriete exclusive de SCHNEIDER ELECTRIC INDUSTRIES SA et ne peuvent etre utilisees ou divulguees a des tiers quels qu'ils soient sans son accord ecrit. Seuls nous engagent pour execution les plans et schemas remis apres enregistrement de la commande. Les appareils representes sur ce schema sont en position ouvert desarmes - debroches - toutes sources coupees.

ETIQUETTE A
COLLEE A L'INTERIEUR DE LA PORTE
EN BAS COTE GAUCHE

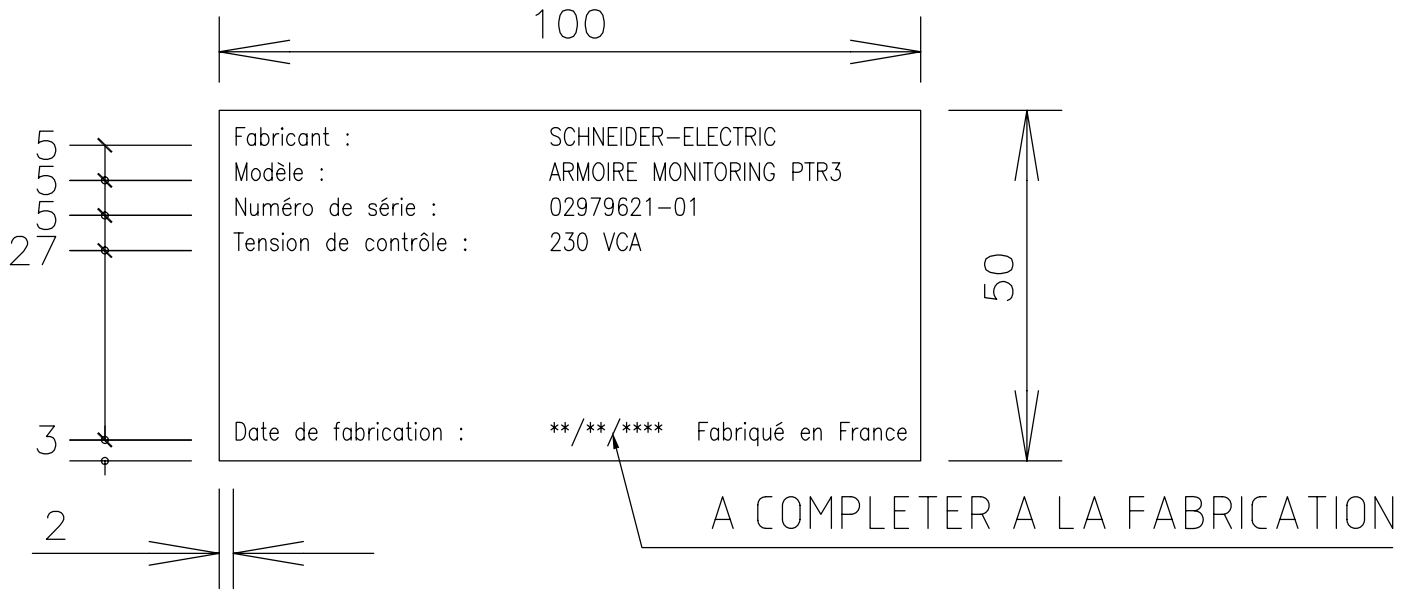

ETIQUETTE B

PLAQUE DILOPHANE GRAVEE AUTO-ADHESIVE
ECRITURE NOIRE SUR FOND BLANC
HAUTEUR DES LETTRES : 2.5 mm
CARACTERES : HELVETICA-NARROW

PLAQUE DILOPHANE GRAVEE AUTO-ADHESIVE
ECRITURE NOIRE SUR FOND BLANC
HAUTEUR DES LETTRES : 10 mm
CARACTERES : HELVETICA-NARROW

Ind. rev	Date date	Modification/ Modification	Archiv. micro-filmed	Ind. rev	Date date	Modification/ Modification	Archiv. micro-filmed
OO	16 12 09	Edition originale/ First issue					

MARQUAGE

JUMBO SCORE
SAVANNAH
CENTRALE
PHOTOVOLTAIQUE

Schneider Electric

0297962 1 00

Projet - No commande / Project - Order NO.: FPVPB1354 | Ind/rev: 00 | Folio /sheet: 007/ .

Original AutoCAD format A3

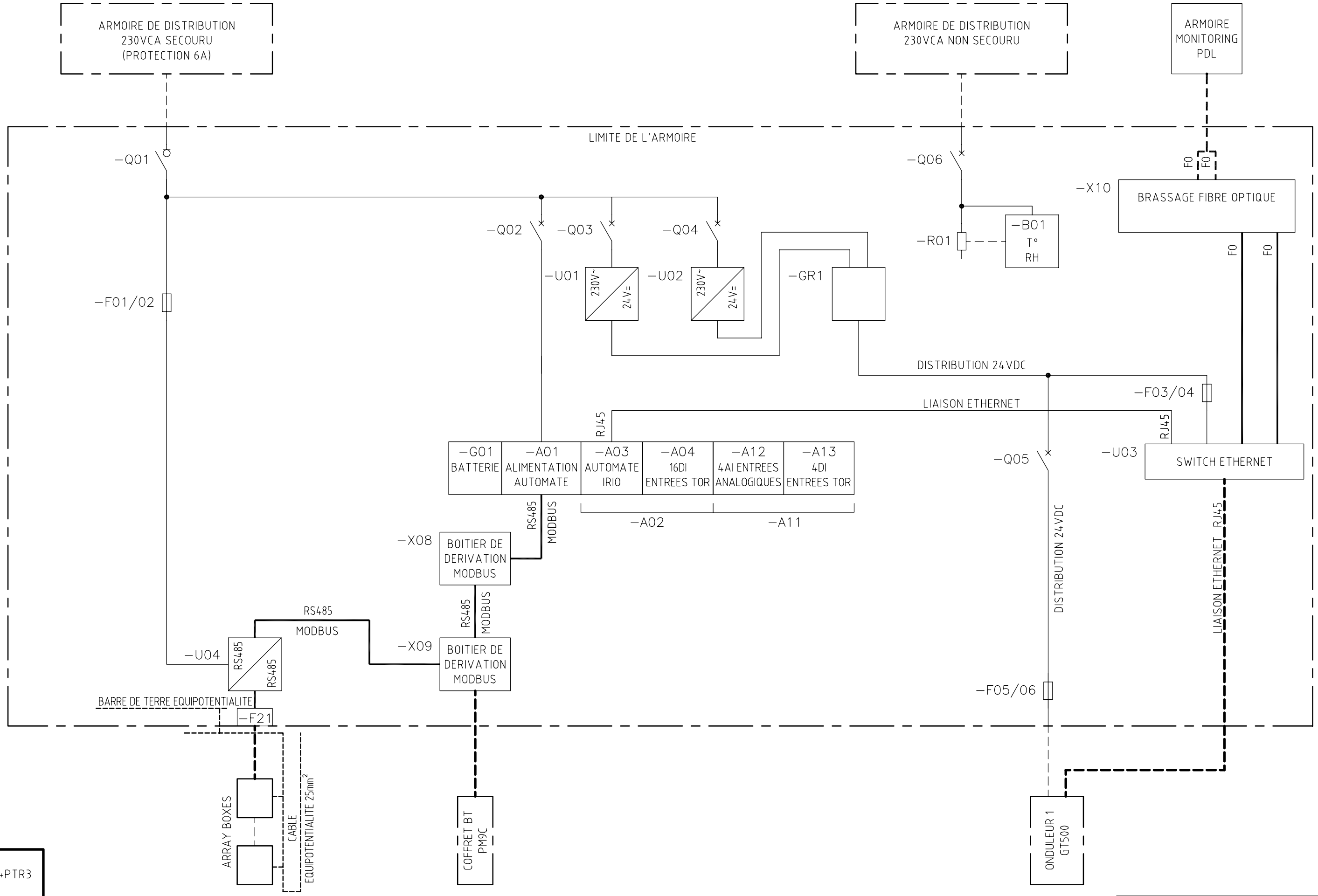

All technical information contained in this document is the exclusive property of SCHNEIDER ELECTRIC INDUSTRIES SA and may neither be used nor disclosed without its prior written consent. Only those drawings and diagrams remitted after order booking are binding for execution. All devices shown in this diagram are in open position, drawn out, with operating mechanisms discharged and all power sources off.

Les informations techniques contenues dans ce document sont la propriete exclusive de SCHNEIDER ELECTRIC INDUSTRIES SA et ne peuvent etre utilisees ou divulguees a des tiers quels qu'ils soient sans son accord ecrit. Seuls nous engagent pour execution les plans et schemas remis apres enregistrement de la commande. Les appareils representes sur ce schema sont en position ouvert desarmes – debroches – toutes sources coupees.

Ind. rev	Date date	Modification/ Modification	Archiv. micro-filmed	Ind. rev	Date date	Modification/ Modification	Archiv. micro-filmed
00	16 12 09	Edition originale/ First issue					

UNIFILAIRE GENERAL
DE L'ARMOIRE

JUMBO SCORE
SAVANNAH
CENTRALE
PHOTOVOLTAIQUE

Schneider Electric

0297962100

Projet – No commande / Project – Order NO.: FPVPB1354

Ind/rev: 00

Folio /sheet: 010/ .

Original AutoCAD format A3

All technical information contained in this document is the exclusive property of SCHNEIDER ELECTRIC INDUSTRIES SA and may neither be used nor disclosed without its prior written consent. Only those drawings and diagrams remitted after order booking are binding for execution. All devices shown in this diagram are in open position, drawn out, with operating mechanisms discharged and all power sources off.

Les informations techniques contenues dans ce document sont la propriete exclusive de SCHNEIDER ELECTRIC INDUSTRIES SA et ne peuvent etre utilisees ou divulguees a des tiers quels qu'ils soient sans son accord ecrit. Seuls nous engagent pour execution les plans et schemas remis apres enregistrement de la commande. Les appareils representes sur ce schema sont en position ouvert desarmes - debroches - toutes sources coupees.

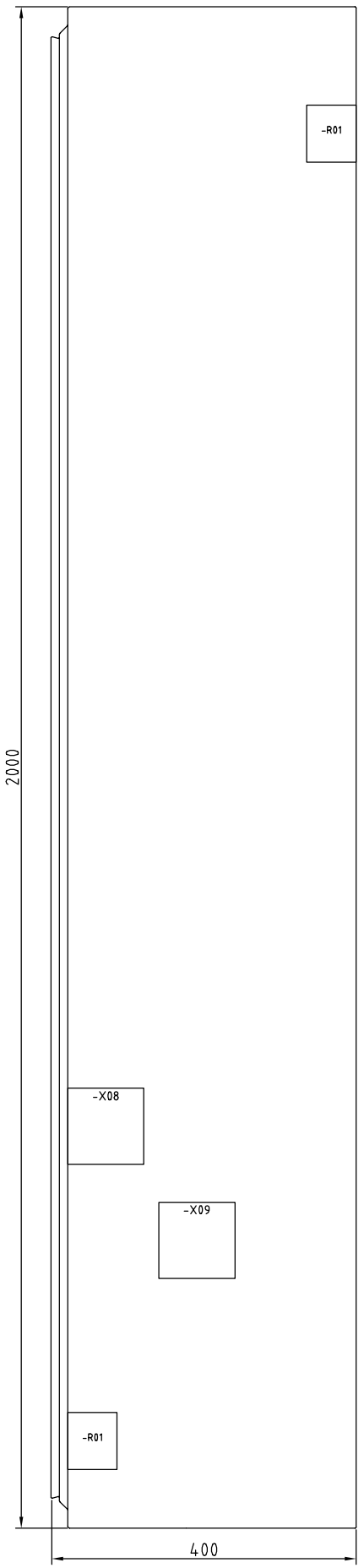

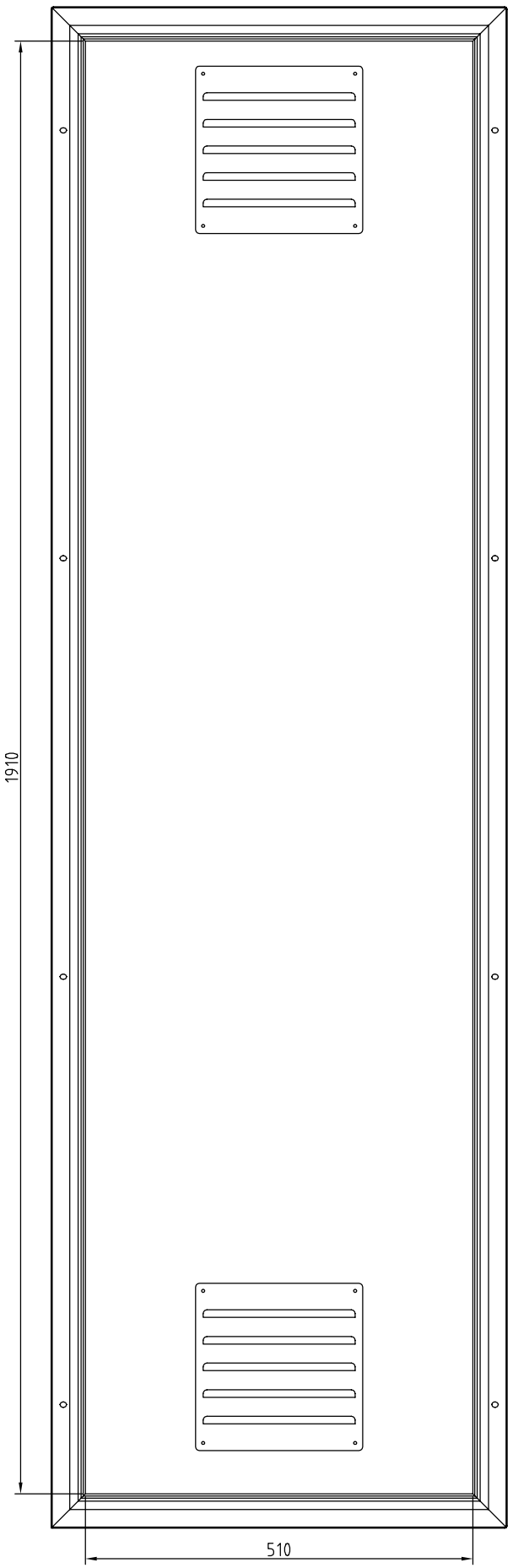

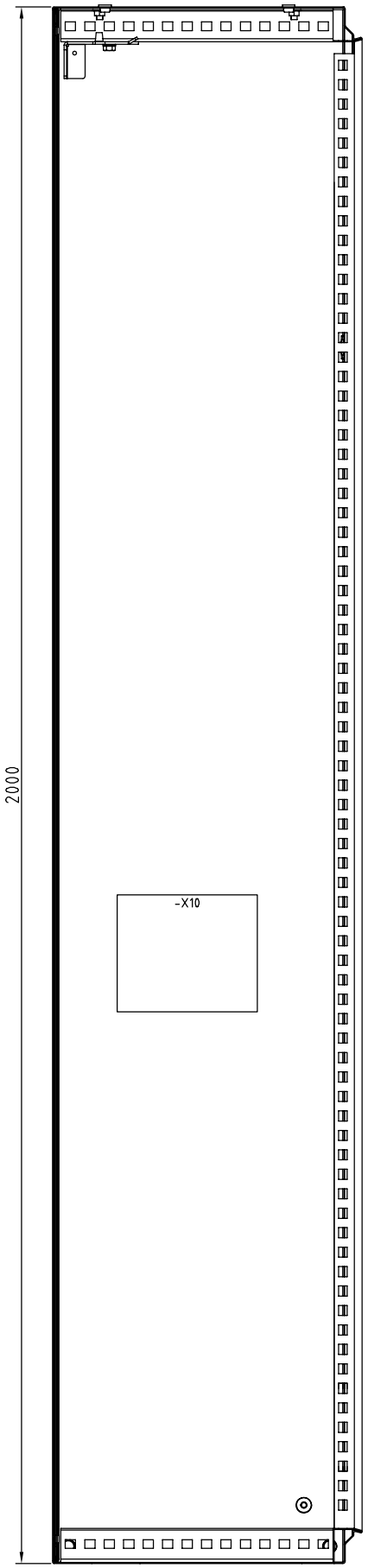

ATTENTION :
Inverser le sens d'ouverture standard de la porte, charnieres coté gauche

NOTA :
Prévoir entretoises pour fixation boîte optique afin de laisser l'accès à la verticale pour la fibre optique

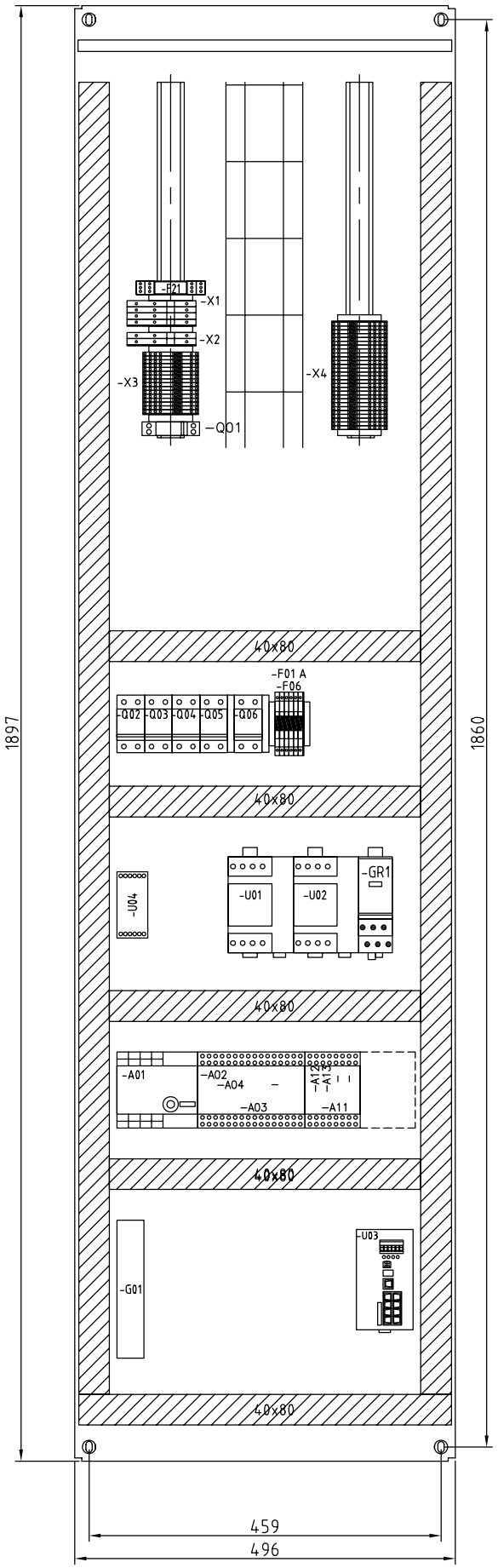

+PTR3

Ind. rev	Date date	Modification/ Modification	Archiv. micro-filmed	Ind. rev	Date date	Modification/ Modification	Archiv. micro-filmed
02	30 04 10	Tel que construit					
00	16 12 09	Edition originale/ First issue					

IMPLANTATION
MATERIEL

JUMBO SCORE
SAVANNAH
CENTRALE
PHOTOVOLTAIQUE

Schneider Electric

0297962100

Projet - No commande
Project - Order NO.
FPVPB1354

Ind/rev 02

Folio /sheet 015/ .

Original AutoCAD format A3

All technical information contained in this document is the exclusive property of SCHNEIDER ELECTRIC INDUSTRIES SA and may neither be used nor disclosed without its prior written consent. Only those drawings and diagrams remitted after order booking are binding for execution. All devices shown in this diagram are in open position, drawn out, with operating mechanisms discharged and all power sources off.

Les informations techniques contenues dans ce document sont la propriete exclusive de SCHNEIDER ELECTRIC INDUSTRIES SA et ne peuvent etre utilisees ou divulguees a des tiers quels qu'ils soient sans son accord ecrit. Seuls nous engagent pour execution les plans et schemas remis apres enregistrement de la commande. Les appareils representes sur ce schema sont en position ouvert desarmes - debroches - toutes sources coupees.

FIXATIONS : 4 x M12

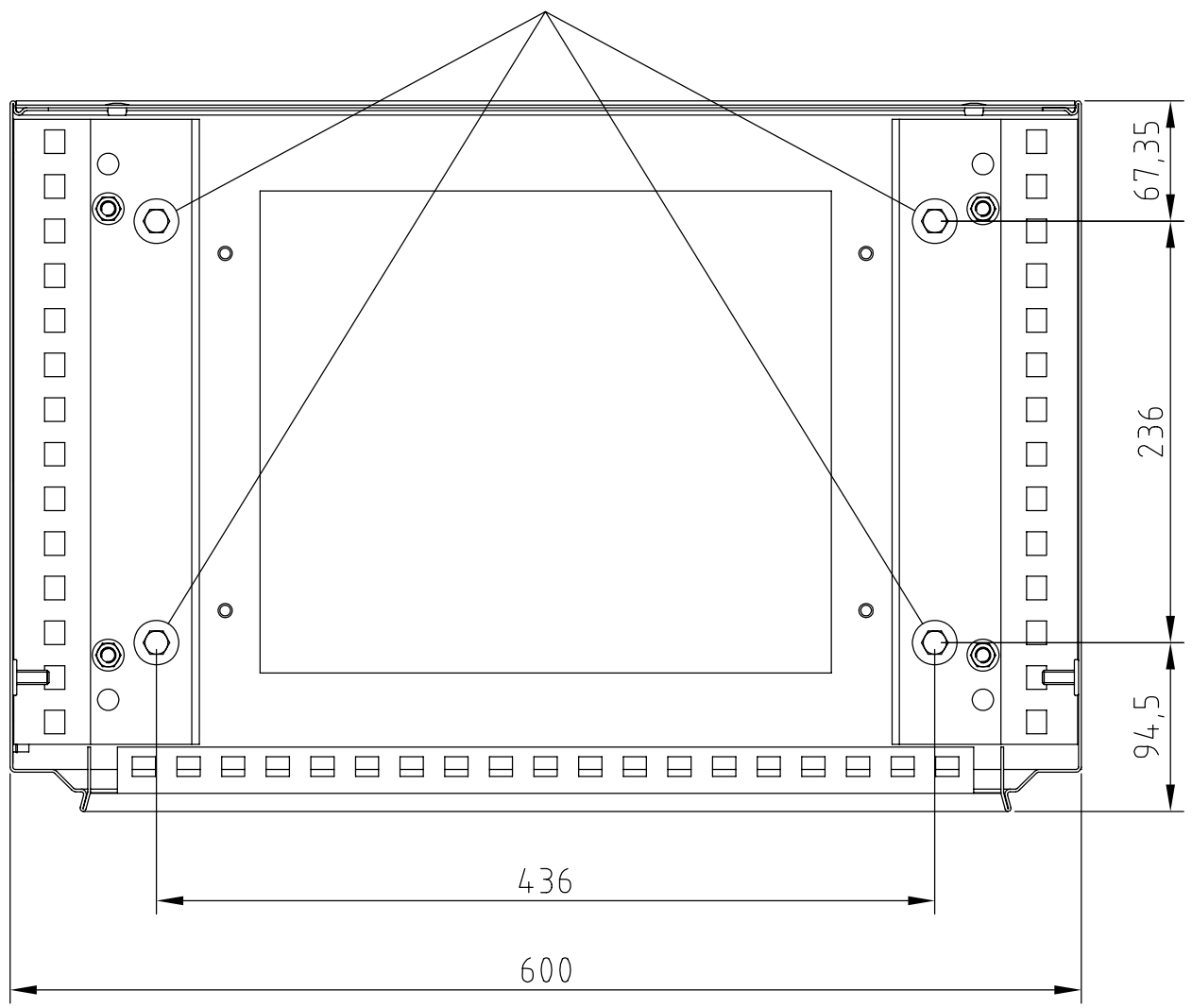

Ind. rev	Date date	Modification/ Modification	Archiv. micro-filmed	Ind. rev	Date date	Modification/ Modification	Archiv. micro-filmed
OO	16 12 09	Edition originale/ First issue					

FIXATIONS AU SOL

ARMOIRE

JUMBO SCORE
SAVANNAH
CENTRALE
PHOTOVOLTAIQUE

Schneider Electric

0297962100

Projet - No commande
Project - Order NO.
FPVPB1354

Ind/rev: 00

Folio /sheet: 016/ .

Original AutoCAD format A3

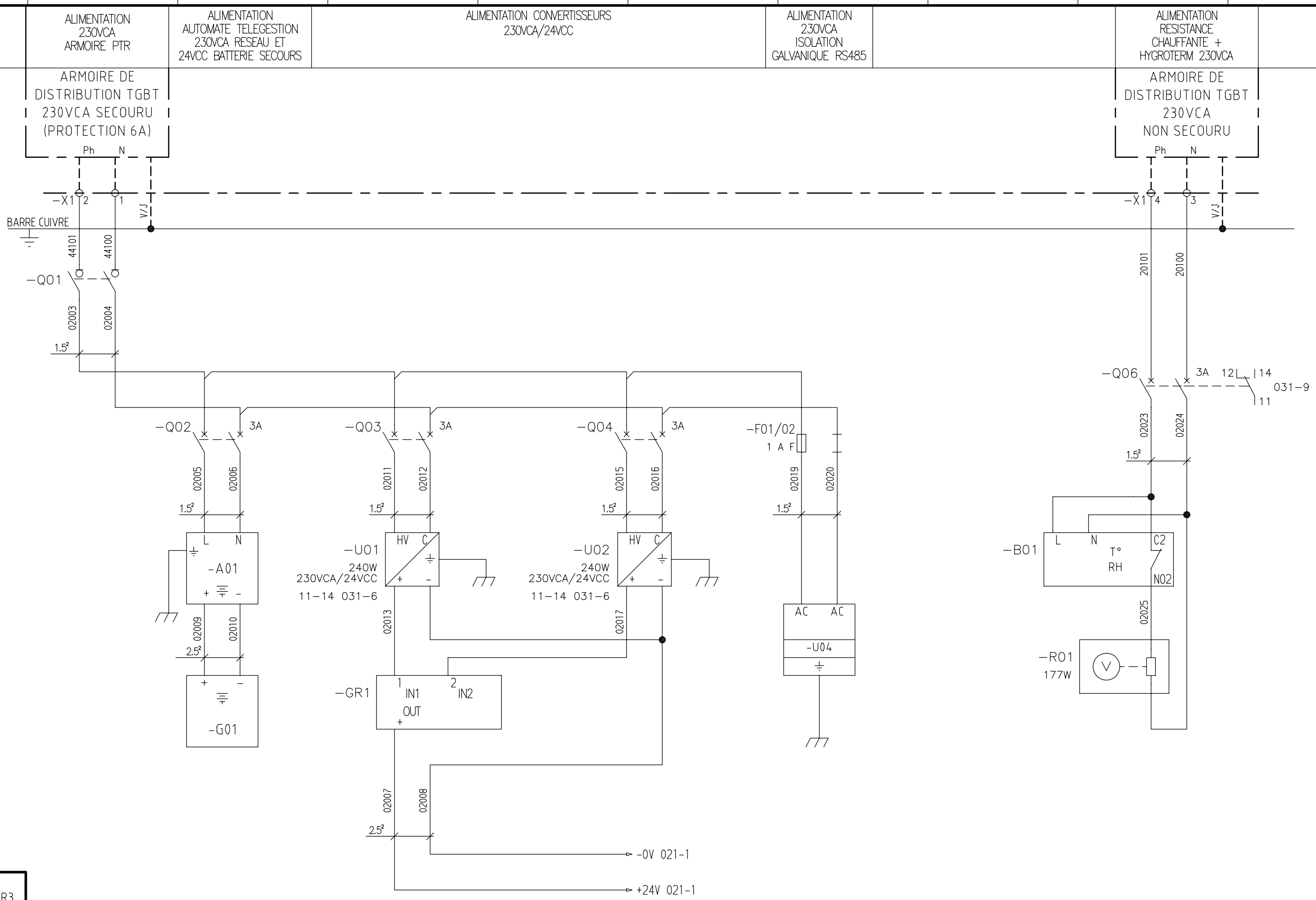

+PTR3

Ind. rev	Date date	Modification/ Modification	Archiv. micro-filmed	Ind. rev	Date date	Modification/ Modification	Archiv. micro-filmed
02	30 04 10	Tel que construit					
01	13 01 10	MAJ F20 et 31					
00	16 12 09	Edition originale/ First issue					

DISTRIBUTION
—
DES POLARITES
—
230VCA

JUMBO SCORE
SAVANNAH
CENTRALE
PHOTOVOLTAIQUE
—

Schneider Electric

0297962100

Projet – No commande
Project – Order NO.
FPVPB1354

Ind/rev 02

Folio /sheet 020/ .

Original AutoCAD format A3

All technical information contained in this document is the exclusive property of SCHNEIDER ELECTRIC INDUSTRIES SA and may neither be used nor disclosed without its prior written consent. Only those drawings and diagrams remitted after order booking are binding for execution. All devices shown in this diagram are in open position, drawn out, with operating mechanisms discharged and all power sources off.

Les informations techniques contenues dans ce document sont la propriete exclusive de SCHNEIDER ELECTRIC INDUSTRIES SA et ne peuvent etre utilisees ou divulguees a des tiers quels qu'ils soient sans son accord ecrit. Seuls nous engagent pour execution les plans et schemas remis apres enregistrement de la commande. Les appareils representes sur ce schema sont en position ouvert desarmes – debroches – toutes sources coupees.

ALIMENTATION 24VCC PASSERELLE ETHERNET ONDULEUR 1	ALIMENTATION 24VCC SWITCH ETHERNET

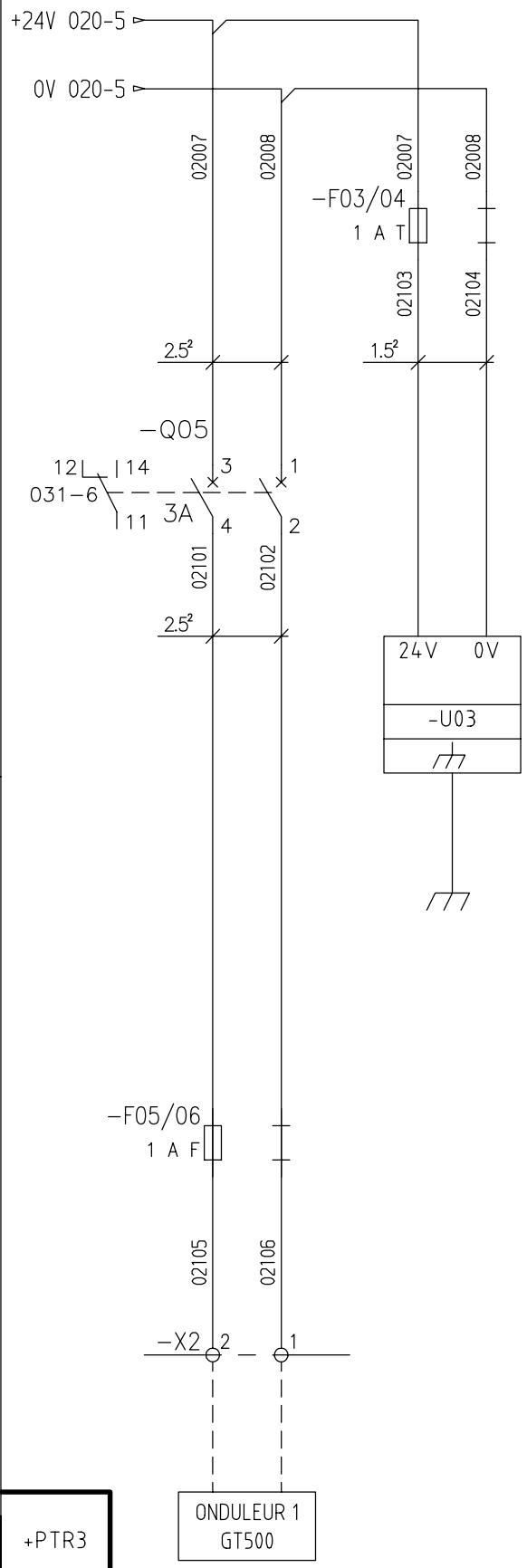

+PTR3

All technical information contained in this document is the exclusive property of SCHNEIDER ELECTRIC INDUSTRIES SA and may neither be used nor disclosed without its prior written consent. Only those drawings and diagrams remitted after order booking are binding for execution. All devices shown in this diagram are in open position, drawn out, with operating mechanisms discharged and all power sources off.

Les informations techniques contenues dans ce document sont la propriete exclusive de SCHNEIDER ELECTRIC INDUSTRIES SA et ne peuvent etre utilisees ou divulguees a des tiers quels qu'ils soient sans son accord ecrit. Seuls nous engagent pour execution les plans et schemas remis apres enregistrement de la commande. Les appareils representes sur ce schema sont en position ouvert desarmes – debroches – toutes sources coupees.

Ind. rev	Date date	Modification/ Modification	Archiv. micro-filmed	Ind. rev	Date date	Modification/ Modification	Archiv. micro-filmed
00	16 12 09	Edition originale/ First issue					

DISTRIBUTION
–
DES POLARITES
–
24VCC

JUMBO SCORE
SAVANNAH
CENTRALE
PHOTOVOLTAIQUE
–

Schneider Electric

0297962 1|00

Projet – No commande Project – Order NO.	Ind/rev	Folio /sheet
FPVPB1354	00	021/ .

Original AutoCAD format A3

LIAISON INTERNE	TYPE DE LIAISON	RACCORDEMENT TENANT	RACCORDEMENT ABOUTISSANT	CABLE
-W01	FIBRE OPTIQUE	CONNECTEUR SC DOUBLE	CONNECTEUR SC DOUBLE	FIBRE MULTIMODE FX 50/125 DSC 100Mbits
-W02	LIAISON CUIVRE	RJ45	RJ45	CABLE ETHERNET

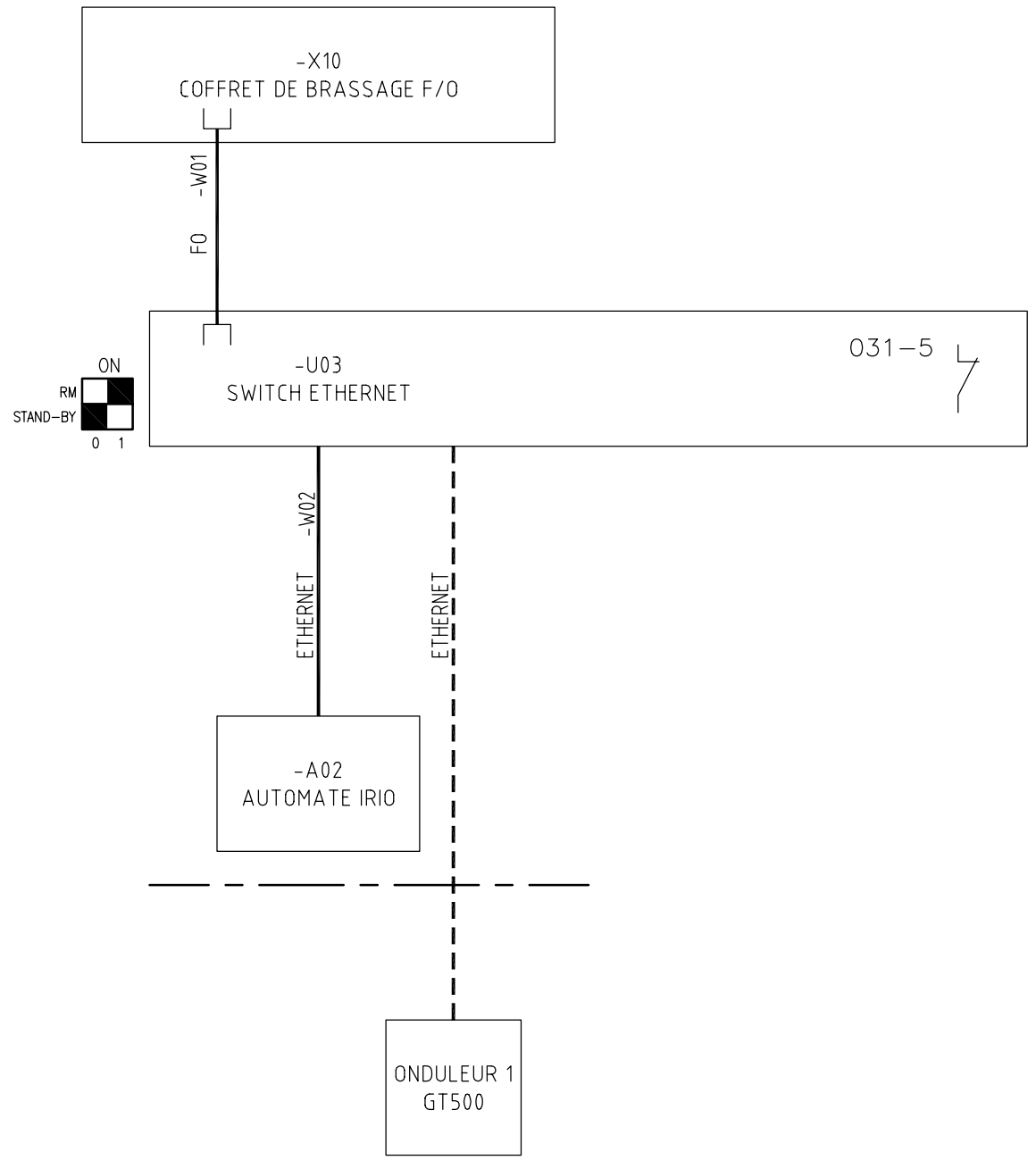

+PTR3

Ind. rev	Date date	Modification/ Modification	Archiv. micro-filmed	Ind. rev	Date date	Modification/ Modification	Archiv. micro-filmed
00	16 12 09	Edition originale/ First issue					

LIAISONS
—
FIBRES OPTIQUES
—
ET RESEAU ETHERNET

JUMBO SCORE
SAVANNAH
CENTRALE
PHOTOVOLTAIQUE
—

Schneider Electric

0297962 1 00

Projet – No commande / Project – Order NO.	Ind/rev	Folio /sheet
FPVPB1354	00	025/ .

Original AutoCAD format A3

All technical information contained in this document is the exclusive property of SCHNEIDER ELECTRIC INDUSTRIES SA and may neither be used nor disclosed without its prior written consent. Only those drawings and diagrams remitted after order booking are binding for execution. All devices shown in this diagram are in open position, drawn out, with operating mechanisms discharged and all power sources off.

Les informations techniques contenues dans ce document sont la propriete exclusive de SCHNEIDER ELECTRIC INDUSTRIES SA et ne peuvent etre utilisees ou divulguees a des tiers quels qu'ils soient sans son accord ecrit. Seuls nous engagent pour execution les plans et schemas remis apres enregistrement de la commande. Les appareils representes sur ce schema sont en position ouvert desarmes – debroches – toutes sources coupees.

LIAISON INTERNE	TYPE DE LIAISON	RACCORDEMENT TENANT	RACCORDEMENT ABOUTISSANT	CABLE
-W05	RS485	VISSE	VISSE	Câble BELDEN 9841 (2 conducteurs avec blindage)
-W06	RS485	VISSE	VISSE	Câble BELDEN 9841 (2 conducteurs avec blindage)
-W07	RS485	VISSE	VISSE	Câble BELDEN 9841 (2 conducteurs avec blindage)
-W08	RS485	VISSE	VISSE	Câble BELDEN 9841 (2 conducteurs avec blindage)

CODE COULEUR DES BRINS :

BLANC/BLEU = Bc/B

BLEU/BLANC = B/Bc

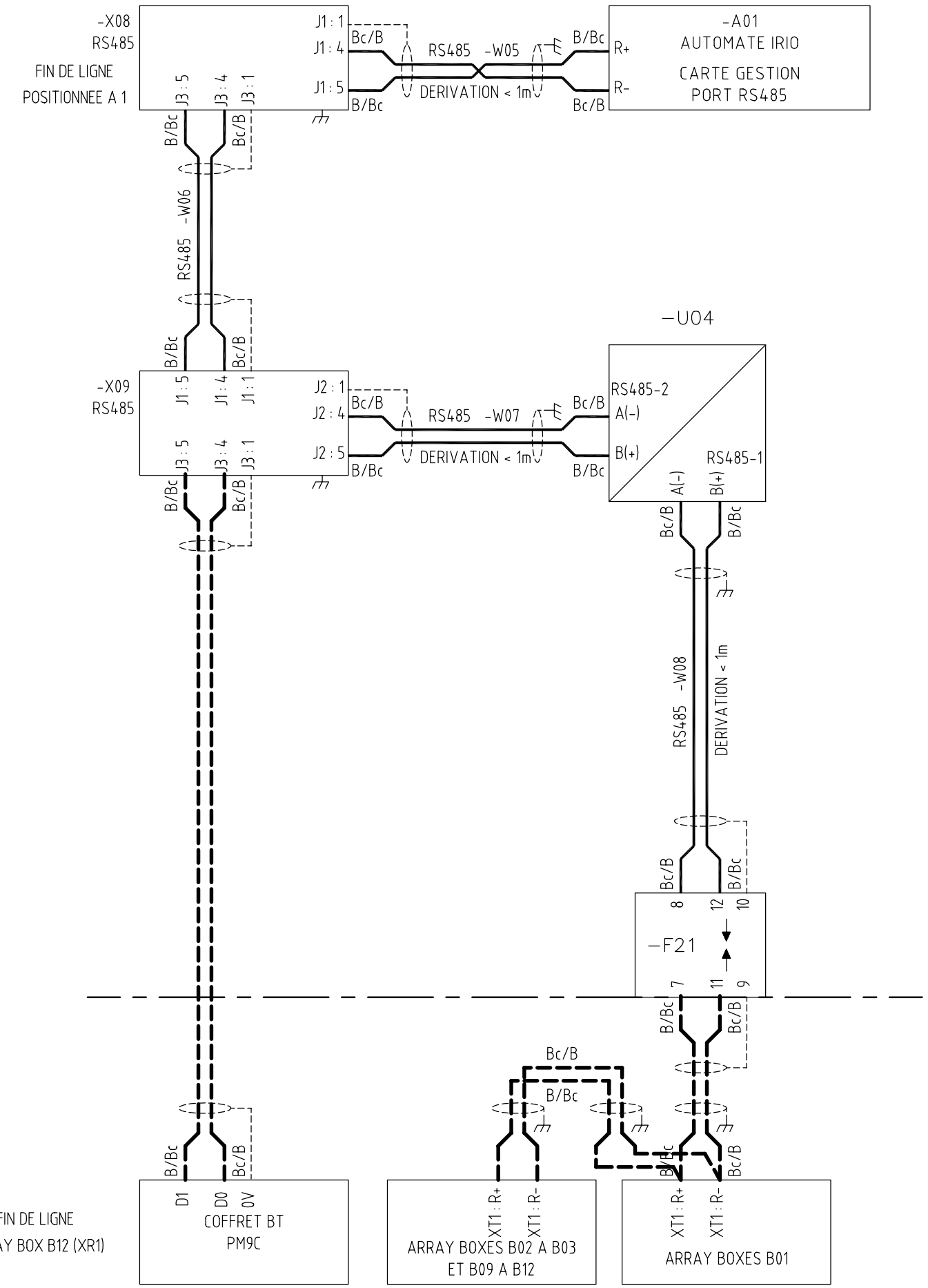

RACCORDER UNE RESISTANCE DE FIN DE LIGNE
COTE COFFRET BT PM9C ET COTE ARRAY BOX B12 (XR1)

All technical information contained in this document is the exclusive property of SCHNEIDER ELECTRIC INDUSTRIES SA and may neither be used nor disclosed without its prior written consent. Only those drawings and diagrams remitted after order booking are binding for execution. All devices shown in this diagram are in open position, drawn out, with operating mechanisms discharged and all power sources off.

Les informations techniques contenues dans ce document sont la propriete exclusive de SCHNEIDER ELECTRIC INDUSTRIES SA et ne peuvent etre utilisees ou divulguees a des tiers quels qu'ils soient sans son accord ecrit. Seuls nous engagent pour execution les plans et schemas remis apres enregistrement de la commande. Les appareils representes sur ce schema sont en position ouvert desarmes – debroches – toutes sources coupees.

+PTR3

Ind. rev	Date date	Modification/ Modification	Archiv. micro-filmed	Ind. rev	Date date	Modification/ Modification	Archiv. micro-filmed
02	30 04 10	Tel que construit					
00	16 12 09	Edition originale/ First issue					

–
LIAISONS
–
RS485
–

JUMBO SCORE
SAVANNAH
CENTRALE
PHOTOVOLTAIQUE
–

Schneider Electric

0297962 1 00

Projet – No commande / Project – Order NO.	Ind/rev	Folio /sheet
FPVPB1354	02	026/ .

Original AutoCAD format A3

All technical information contained in this document is the exclusive property of SCHNEIDER ELECTRIC INDUSTRIES SA and may neither be used nor disclosed without its prior written consent. Only those drawings and diagrams remitted after order booking are binding for execution. All devices shown in this diagram are in open position, drawn out, with operating mechanisms discharged and all power sources off.

Les informations techniques contenues dans ce document sont la propriete exclusive de SCHNEIDER ELECTRIC INDUSTRIES SA et ne peuvent etre utilisees ou divulguees a des tiers quels qu'ils soient sans son accord ecrit. Seuls nous engagent pour execution les plans et schemas remis apres enregistrement de la commande. Les appareils representes sur ce schema sont en position ouvert desarmes - debroches - toutes sources coupees.

VUE DE FACE /
FRONT VIEW

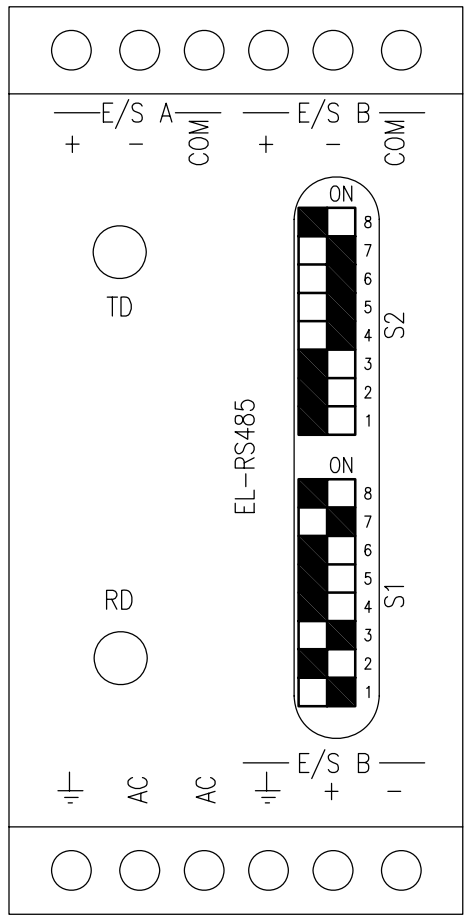

Micro-Switch S1 / Dip-Switch S1

1	2	3	4	5	6	7	8

0 : OFF
1 : ON

1 2	10 : Obligatoire / Mandatory
3 4	10 : Obligatoire / Mandatory
5 6 7	001 : Obligatoire / Mandatory Autres combinaisons impossibles / Other combination is not possible
8	0 : No Common link towards the ground via 100 Ohms (E/S B)

Micro-Switch S2 I/O B / Dip-Switch S2 I/O B

1	2	3	4	5	6	7	8

0 : OFF
1 : ON

1	0 : No connection between middle point of terminal charges and ground
2 3	00 : Obligatoire / Mandatory
4	1 : Pull DOWN charge connected to receive (–) I/O B
5	1 : Pull UP charge connected to receive (+) I/O B
6 7	11 : Terminal Charges connected I/O B
8	0 : No connection between common circuit and terminal charges I/O B

VUE DE DESSUS /
TOP VIEW

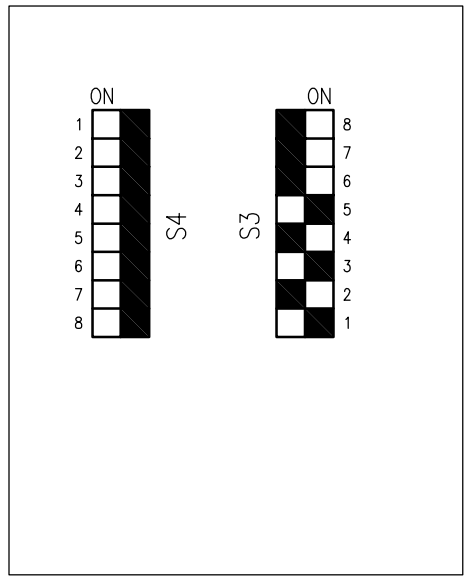

Micro-Switch S3 / Dip-Switch S3

1	2	3	4	5	6	7	8

0 : OFF
1 : ON

Data transmission characteristics : S3-1 to S3-5

SPEED	S3-1	S3-2	S3-3
9600 bps	1	0	1

FORMAT	S3-4	S3-5
7 bits, 2 stops, with parity	0	1

S3-6	OFF (ON : not allowed)
S3-7	OFF (ON : not allowed)
S3-8	OFF (ON : not allowed)

Micro-Switch S4 (I/O A) / Dip-Switch S4 (I/O A)

1	2	3	4	5	6	7	8

0 : OFF
1 : ON

1	1 : Pull DOWN connected I/O A
2	1 : Pull UP connected I/O A
3 4	11 : Terminal Charges connected (I/O A)
5	1 : Connection between middle point of terminal charges and ground (I/O A)
6	1 : Connection between common circuit and terminal charges (I/O A)
7	1 : Common link towards the Earth via 100 Ohms (I/O A)
8	1 : Connection between common circuit and ground (I/O A)

+PTR3

Ind. rev	Date date	Modification/ Modification	Archiv. micro-filmed	Ind. rev	Date date	Modification/ Modification	Archiv. micro-filmed
00	16 12 09	Edition originale/ First issue					

ISOLATION GALVANIQUE
–
RS485
–
PARAMETRAGES

JUMBO SCORE
SAVANNAH
CENTRALE
PHOTOVOLTAIQUE
–

Schneider Electric

Projet – No commande Project – Order NO.	Ind/rev	Folio /sheet
0297962 100 FPVPB1354	00	027/ .

Original AutoCAD format A3

BOITIER ALIMENTATION ET COMMUNICATION AUTOMATE TELEGESTION	AUTOMATE TELEGESTION		EXTENSION CARTES AUTOMATE			
	CARTE E LOGIQUES	RESERVE	CARTE E ANALOG.	CARTE E LOGIQUES	RESERVE	RESERVE
	CPU					

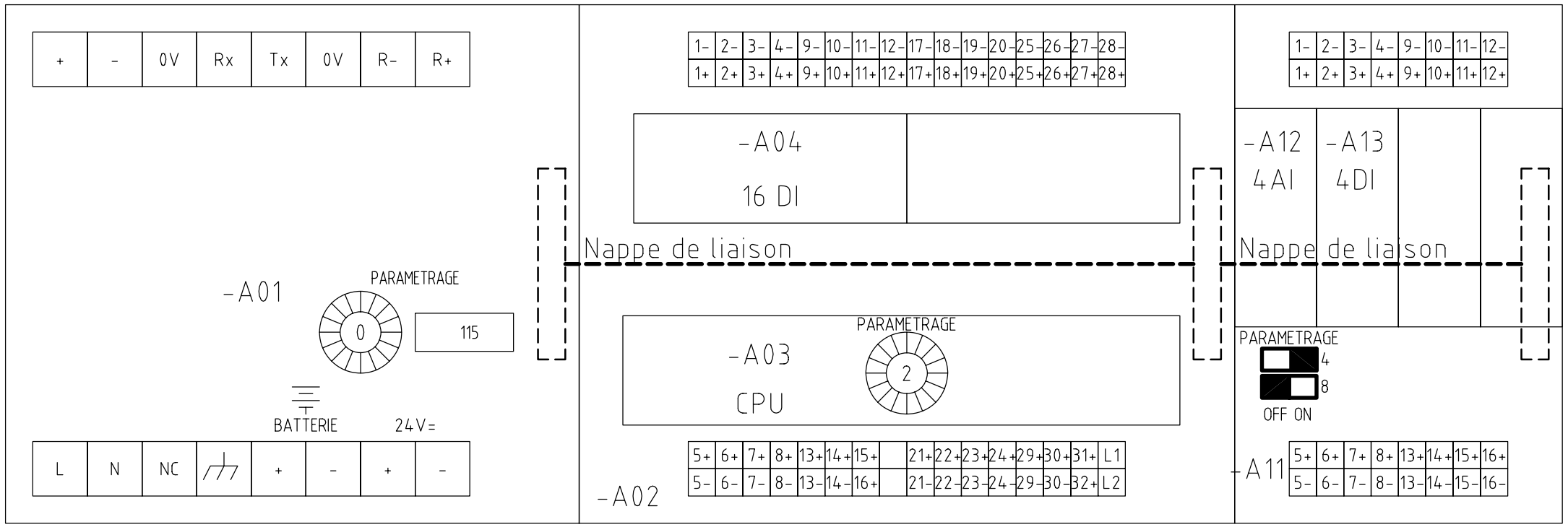

+PTR3

Ind. rev	Date date	Modification/ Modification	Archiv. micro-filmed	Ind. rev	Date date	Modification/ Modification	Archiv. micro-filmed
00	16 12 09	Edition originale/ First issue					

EXTENSION AUTOMATE
—
PRESENTATION
—
ALIMENTATION MODBUS

JUMBO SCORE
SAVANNAH
CENTRALE
PHOTOVOLTAIQUE
—

Schneider Electric

0297962100

Projet – No commande Project – Order NO.	Ind/rev	Folio /sheet
FPVPB1354	00	030/ .

Original AutoCAD format A3

All technical information contained in this document is the exclusive property of SCHNEIDER ELECTRIC INDUSTRIES SA and may neither be used nor disclosed without its prior written consent. Only those drawings and diagrams remitted after order booking are binding for execution. All devices shown in this diagram are in open position, drawn out, with operating mechanisms discharged and all power sources off.

Les informations techniques contenues dans ce document sont la propriete exclusive de SCHNEIDER ELECTRIC INDUSTRIES SA et ne peuvent etre utilisees ou divulguees a des tiers quels qu'ils soient sans son accord ecrit. Seuls nous engagent pour execution les plans et schemas remis apres enregistrement de la commande. Les appareils representes sur ce schema sont en position ouvert desarmes – debroches – toutes sources coupees.

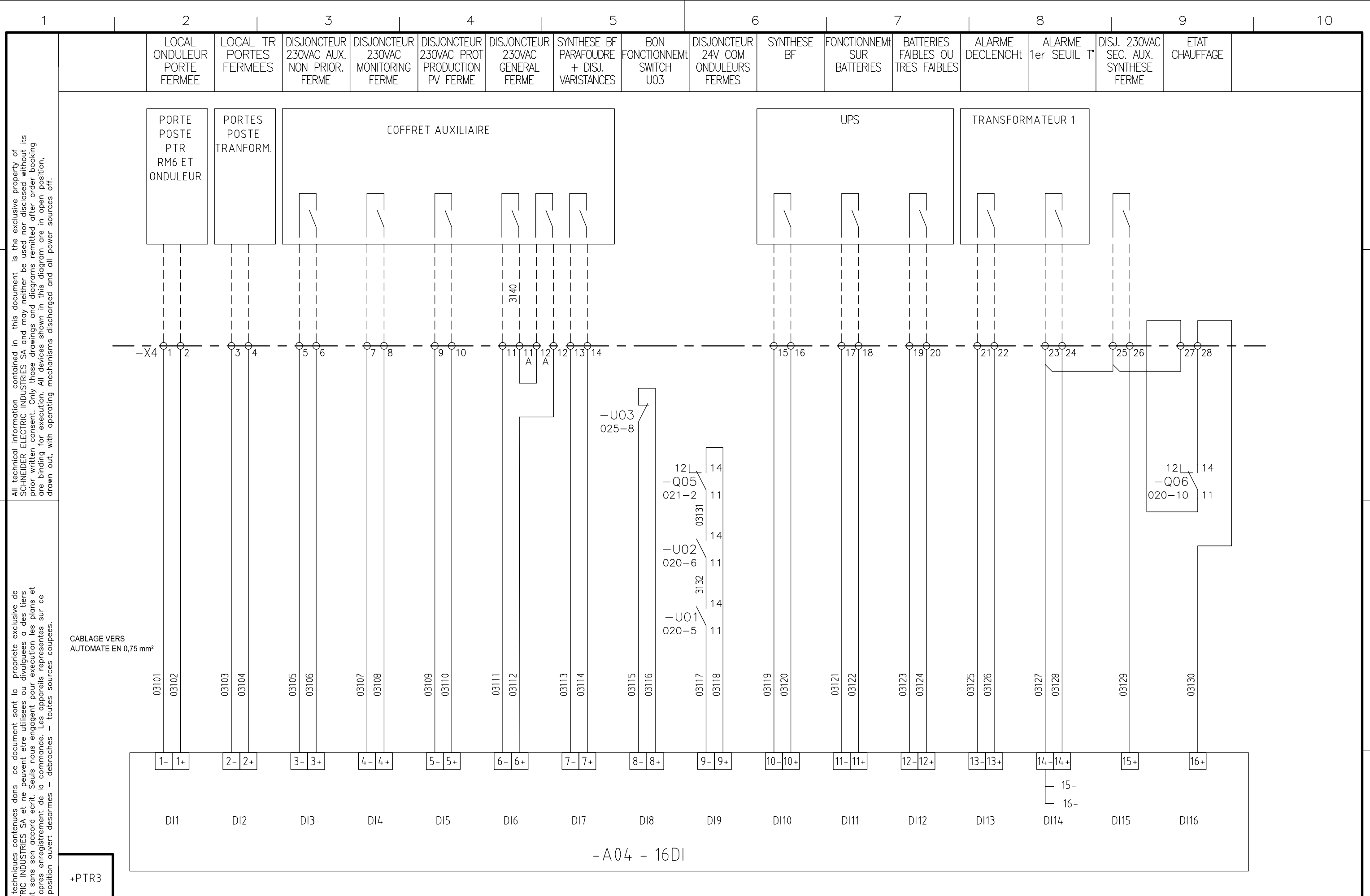

+PTR3

Ind. rev	Date date	Modification/ Modification	Archiv. micro-filmed	Ind. rev	Date date	Modification/ Modification	Archiv. micro-filmed
02	30 04 10	Tel que construit					
01	13 01 10	MAJ F°20 et 31					
00	16 12 09	Edition originale/ First issue					

AUTOMATE TELEGESTION
CARTES E/S

JUMBO SCORE SAVANNAH CENTRALE PHOTOVOLTAIQUE

Schneider Electric

0297962100

Projet - No commande / Project - Order NO.: FPVPB1354 | Ind/rev: 02 | Folio /sheet: 031/ .

Original AutoCAD format A3

All technical information contained in this document is the exclusive property of SCHNEIDER ELECTRIC INDUSTRIES SA and may neither be used nor disclosed without its prior written consent. Only those drawings and diagrams remitted after order booking are binding for execution. All devices shown in this diagram are in open position, drawn out, with operating mechanisms discharged and all power sources off.

Les informations techniques contenues dans ce document sont la propriete exclusive de SCHNEIDER ELECTRIC INDUSTRIES SA et ne peuvent etre utilisees ou divulguees a des tiers quels qu'ils soient sans son accord ecrit. Seuls nous engagent pour execution les plans et schemas remis apres enregistrement de la commande. Les appareils representes sur ce schema sont en position ouvert desarmes - debroches - toutes sources coupees.

All technical information contained in this document is the exclusive property of SCHNEIDER ELECTRIC INDUSTRIES SA and may neither be used nor disclosed without its prior written consent. Only those drawings and diagrams remitted after order booking are binding for execution. All devices shown in this diagram are in open position, drawn out, with operating mechanisms discharged and all power sources off.

Les informations techniques contenues dans ce document sont la propriete exclusive de SCHNEIDER ELECTRIC INDUSTRIES SA et ne peuvent etre utilisees ou divulguees a des tiers quels qu'ils soient sans son accord ecrit. Seuls nous engagent pour execution les plans et schemas remis apres enregistrement de la commande. Les appareils representes sur ce schema sont en position ouvert desarmes – debroches – toutes sources coupees.

TEMPERATURE INTERIEURE	TEMPERATURE EXTERIEURE	RESERVE	RESERVE	COFFRET DC INV1 ABS. DEFAUT HOMOPOLAIRE	RESERVE	RESERVE	RESERVE

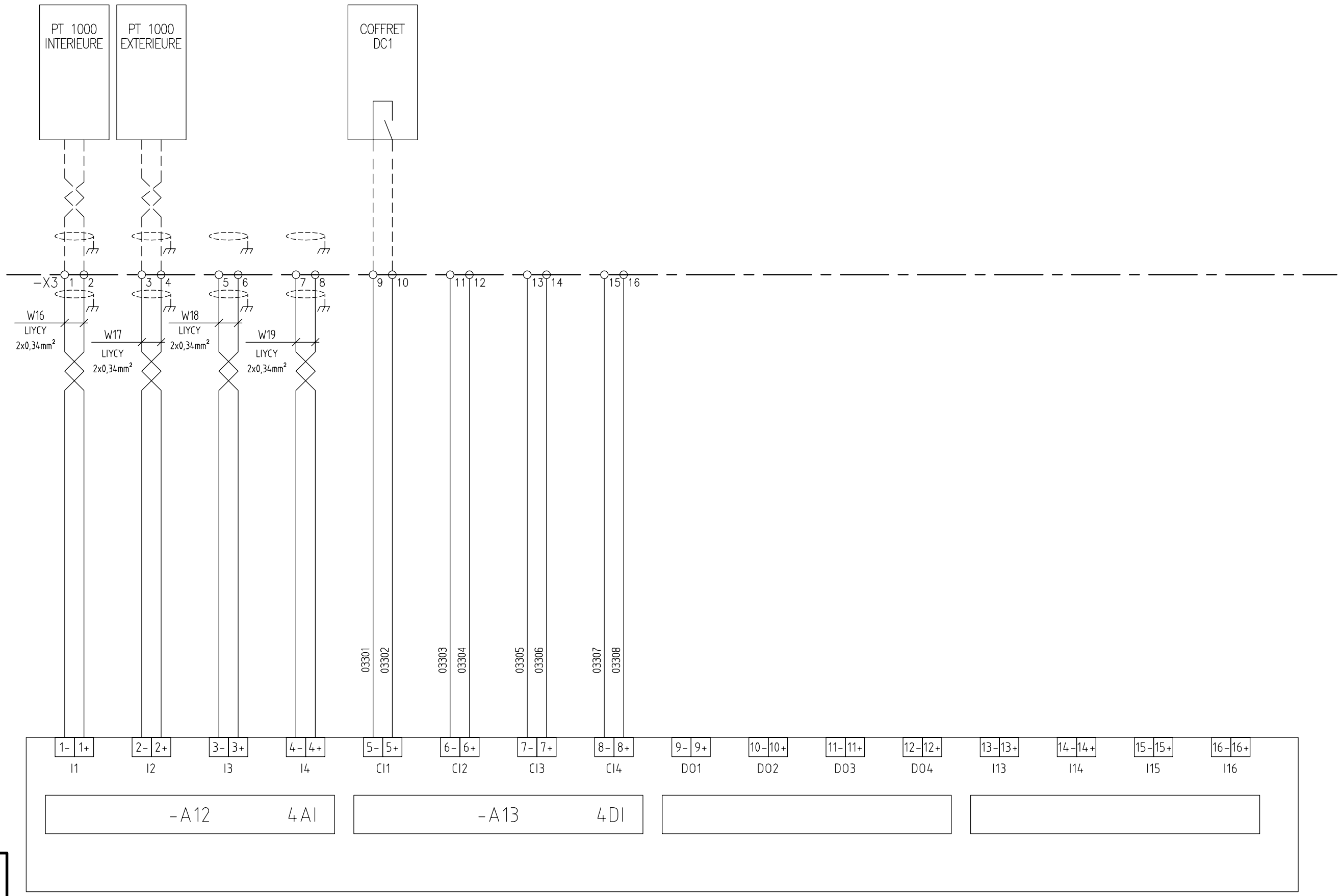

+PTR3

Ind. rev	Date date	Modification/ Modification	Archiv. micro-filmed	Ind. rev	Date date	Modification/ Modification	Archiv. micro-filmed
00	16 12 09	Edition originale/ First issue					

AUTOMATE TELEGESTION
CARTES E/S

JUMBO SCORE
SAVANNAH
CENTRALE
PHOTOVOLTAIQUE

Schneider Electric

0297962 1 00

Projet – No commande / Project – Order NO.: FPVPB1354

Ind/rev: 00

Folio /sheet: 033/ .

Original AutoCAD format A3

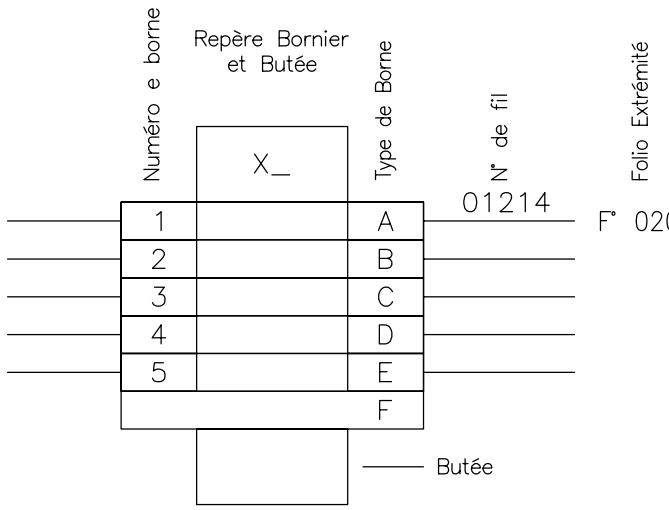

A : Borne TYPE AB1 RESSORT 6 mm² – EPAISSEUR 8mm

B : Borne TYPE AB1 RESSORT SECTIONNABLES A COUTEAU GRIS 3 POINTS – SECTION NOMINALE 2.5 mm² – EPAISSEUR 5mm

C : –

D : –

E : –

F : Flasque ou séparateur *Brida o separador*

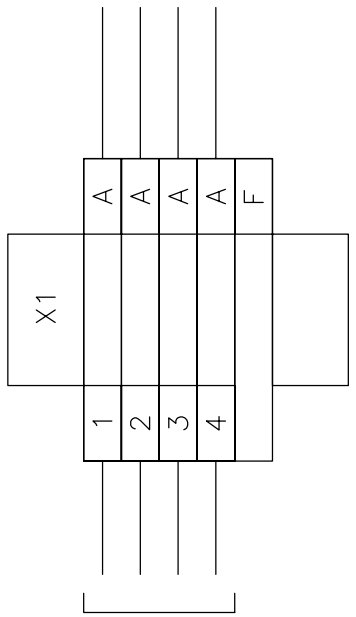

All technical information contained in this document is the exclusive property of SCHNEIDER ELECTRIC INDUSTRIES SA and may neither be used nor disclosed without its prior written consent. Only those drawings and diagrams remitted after order booking are binding for execution. All devices shown in this diagram are in open position, drawn out, with operating mechanisms discharged and all power sources off.

Les informations techniques contenues dans ce document sont la propriete exclusive de SCHNEIDER ELECTRIC INDUSTRIES SA et ne peuvent etre utilisees ou divulguees a des tiers quels qu'ils soient sans son accord ecrit. Seuls nous engagent pour execution les plans et schemas remis apres enregistrement de la commande. Les appareils representes sur ce schema sont en position ouvert desarmes – debroches – toutes sources coupees.

+PTR3

Ind. rev	Date date	Modification/ Modification	Archiv. micro-filmed	Ind. rev	Date date	Modification/ Modification	Archiv. micro-filmed
00	16 12 09	Edition originale/ First issue					

–
–
BORNIER X1
–
–

JUMBO SCORE
SAVANNAH
CENTRALE
PHOTOVOLTAIQUE
–

Schneider Electric

0297962 1 00

Projet – No commande Project – Order NO.	Ind/rev	Folio /sheet
FPVPB1354	00	060/ .

Original AutoCAD format A3

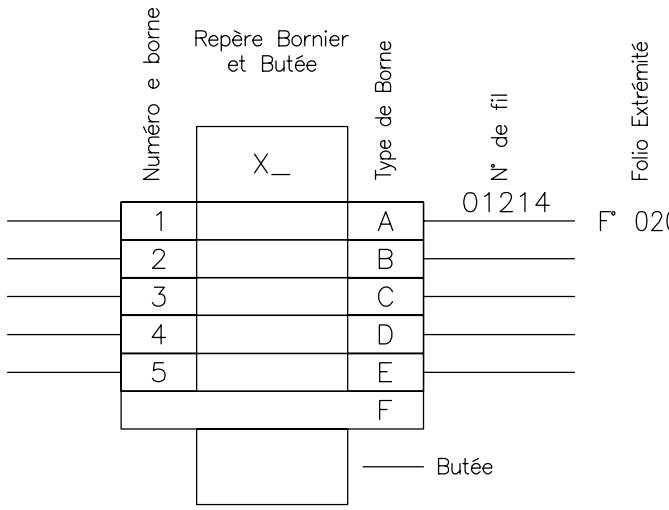

A : Borne TYPE AB1 RESSORT 6 mm² – EPAISSEUR 8mm

B : Borne TYPE AB1 RESSORT SECTIONNABLES A COUTEAU GRIS 3 POINTS – SECTION NOMINALE 2.5 mm² – EPAISSEUR 5mm

C : –

D : –

E : –

F : Flasque ou séparateur *Brida o separador*

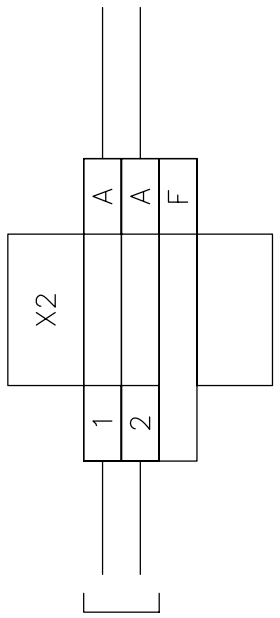

All technical information contained in this document is the exclusive property of SCHNEIDER ELECTRIC INDUSTRIES SA and may neither be used nor disclosed without its prior written consent. Only those drawings and diagrams remitted after order booking are binding for execution. All devices shown in this diagram are in open position, drawn out, with operating mechanisms discharged and all power sources off.

Les informations techniques contenues dans ce document sont la propriete exclusive de SCHNEIDER ELECTRIC INDUSTRIES SA et ne peuvent etre utilisees ou divulguees a des tiers quels qu'ils soient sans son accord ecrit. Seuls nous engagent pour execution les plans et schemas remis apres enregistrement de la commande. Les appareils representes sur ce schema sont en position ouvert desarmes – debroches – toutes sources coupees.

+PTR3

Ind. rev	Date date	Modification/ Modification	Archiv. micro-filmed	Ind. rev	Date date	Modification/ Modification	Archiv. micro-filmed
00	16 12 09	Edition originale/ First issue					

–
–
BORNIER X2
–
–

JUMBO SCORE
SAVANNAH
CENTRALE
PHOTOVOLTAIQUE
–

Schneider Electric

0297962 1 00

Projet – No commande Project – Order NO.	Ind/rev	Folio /sheet
FPVPB1354	00	061/ .

Original AutoCAD format A3

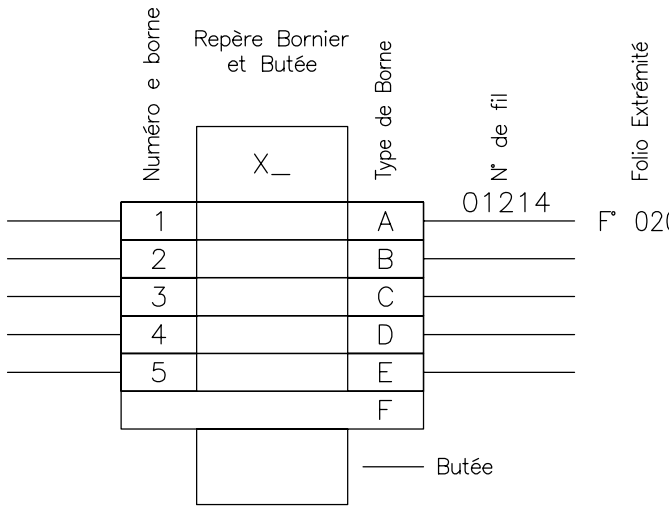

A : Borne TYPE AB1 RESSORT 6 mm² – EPAISSEUR 8mm

B : Borne TYPE AB1 RESSORT SECTIONNABLES A COUTEAU GRIS 3 POINTS – SECTION NOMINALE 2.5 mm² – EPAISSEUR 5mm

C : –

D : –

E : –

F : Flasque ou séparateur *Brida o separador*

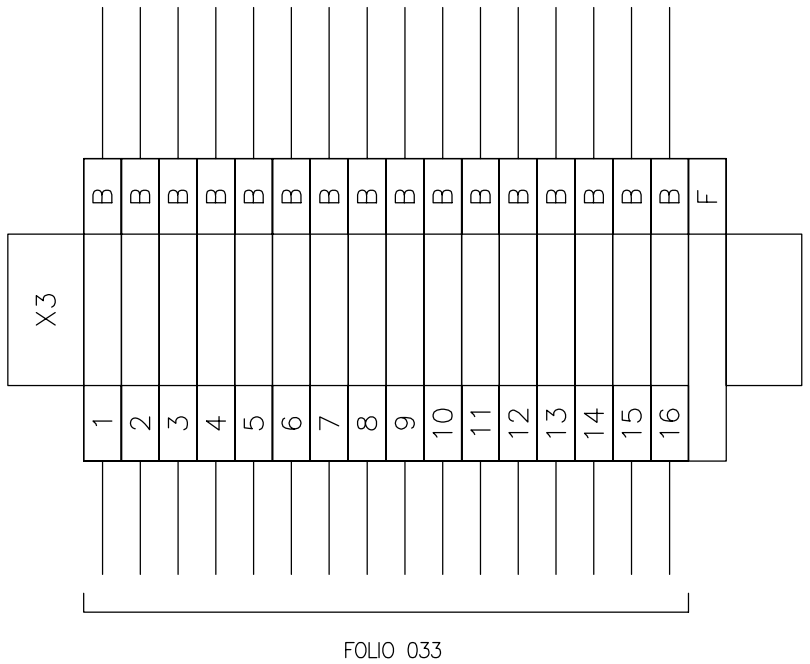

All technical information contained in this document is the exclusive property of SCHNEIDER ELECTRIC INDUSTRIES SA and may neither be used nor disclosed without its prior written consent. Only those drawings and diagrams remitted after order booking are binding for execution. All devices shown in this diagram are in open position, drawn out, with operating mechanisms discharged and all power sources off.

Les informations techniques contenues dans ce document sont la propriete exclusive de SCHNEIDER ELECTRIC INDUSTRIES SA et ne peuvent etre utilisees ou divulguees a des tiers quels qu'ils soient sans son accord ecrit. Seuls nous engagent pour execution les plans et schemas remis apres enregistrement de la commande. Les appareils representes sur ce schema sont en position ouvert desarmes – debroches – toutes sources coupees.

+PTR3

Ind. rev	Date date	Modification/ Modification	Archiv. micro-filmed	Ind. rev	Date date	Modification/ Modification	Archiv. micro-filmed
00	16 12 09	Edition originale/ First issue					

–
–
BORNIER X3
–
–

JUMBO SCORE
SAVANNAH
CENTRALE
PHOTOVOLTAIQUE
–

Schneider Electric

0297962 1 00

Projet – No commande Project – Order NO.	Ind/rev	Folio /sheet
FPVPB1354	00	062/ .

Original AutoCAD format A3