Ref constructeur : EAV5829303 / 0

Schéma de principe MONITORING PDL	**GREEN YELLOW** **CASTRES**

Ind rev	Date Date	Modification / Modification	Status	Nom/name	Visa	Nom/name	Visa	Nom/name	Visa	Archiv micro-filmed
				Dessiné/Drawn		Verifié/Checked		Approuve/Approved		
A	22/01/14	Doc. original	BPO	CAPARROS		CHAVAT		ABBAS		

Les informations techniques contenues dans ce document sont la propriete exclusive de SCHNEIDER ELECTRIC INDUSTRIES SA et ne peuvent être utilisees ou divulguees a des tiers quels qu'ils soient sans son accord ecrit. Seuls nous engagent pour execution les plans et schemas remis apres enregistrement de la commande.
All technical information contained in this document is the exclusive property of SCHNEIDER ELECTRIC INDUSTRIES SA and may neither be used nor disclosed without its prior written consent. Only those drawings and diagrams remitted after order booking are binding for execution.

Echelle
Scale

Unité / Department
Centre d'Exécution France

Code diffusion Distribution code	Projet - N°commande Project - Order N°	N°Clt	CAST_SHP005 / A **ER7CO5075/SHP005**	Ind / rev **A**	Folio/Sheet

Selon QE5130-02 ind A du 11/10/2013

The technical information contained in this document is the exclusive property of Schneider Electric Industries S.A.S and cannot be used or disclosed to third parties of any kind without its written consent. Only those drawings and diagrams expressly intended for order handling and execution are valid. All devices shown in this diagrams are in open position, drawn out with operating mechanism discharged and all power sources off.

Les informations techniques contenues dans ce document sont la propriete exclusive de Schneider Electric Industries S.A.S et ne peuvent etre utilisees ou divulguees a des tiers quelconques sans son accord ecrit. Seuls nous engagent les plans et les schemas ayant ete expressément lies a la commande. Les appareils representes sur ce schéma sont en position ouvert - désarmés - débrochés - toutes sources coupées.

Ind Rev	Date Date	Modification / Modification	Nom / Name	Visa	Nom / Name	Visa	Nom / Name	Visa	Archiv. Micro-filmed
00	17/03/2014	Edition originale / First issue	TORTOROLO		GRUNWALD		KHELIL		
			Dessine / Drawn		Verifie / Checked		Approuve / Approved		

GRID MONITORING CONTROL CAB.
(GRID MCC)
ADVANCED 6 FEEDERS

WIRING

GRID MONITORING CONTROL CAB.
(GRID MCC)
ADVANCED 6 FEEDERS

Echelle / Scale: 1/1

Unite / Department: SOLAR BU

Code diffusion / Distribution code

Projet - No commande / Project - Order No

Released for Manufacturing
Printed on 2014/03/19

EAV5829303

Indice / Rev: 00

Folio / Sheet: 001

A3 garde - 11/2006

Folio Sheet	Designation Designation	Indice de modification Revision
001	COVER PAGE	00
02	LIST OF SHEETS	00
03	LIST OF SHEETS	00
04	LEGEND OF SYMBOLS Part 1	00
05	LEGEND OF SYMBOLS Part 2	00
06	MARKING	00
07	HIGHER LEVEL DESIGNATION	00
08	LOCATION IDENTIFICATION	00
09	DEVICES IDENTIFICATION	00
10	SPECIFIC DEVICES IDENTIFICATION	00
11	SPECIFIC IDENTIFICATION AND MARKING FOR DEVICES AND CORDS	00
12	+24V DC POWER SUPPLY DIAGRAMM - ADVANCED 6 FEEDERS	00
13	MONITORING DIAGRAMM - ADVANCED 6 FEEDERS	00
14	230V AC POWER SUPPLY DIAGRAMM	00
15	+24VDC POWER SUPPLY DISTRIBUTION - ADVANCED 6 FEEDERS	00
16	+24V DC POWER SUPPLY DISTRIBUTION - ADVANCED 6 FEEDERS	00
17	+24V DC POWER SUPPLY DISTRIBUTION - WS Analog Inputs - ADVANCED	00
18	230V AC POWER SUPPLY HEATER	00
19	MultiMod OPTICAL BOX - ADVANCED	00
20	MultiMod ETHERNET TCP/IP SWITCH - ADVANCED	00
21	ADVANCED LINE 1 MODBUS CONNECTION TO AP1R0 M340 AUTOMAT - 6 FEEDERS	00
22	ADVANCED LINE 2 AND 3 MODBUS CONNECTION TO AP1R0 M340 AUTOMAT - 6 FEEDERS	00
23	ADVANCED LINE 4 AND 5 MODBUS CONNECTION TO AP1R0 M340 AUTOMAT - 6 FEEDERS	00
24	ADVANCED AP1R0 M340 AUTOMAT - 6 FEEDERS	00
25	ADVANCED Digitals Inputs - 6 FEEDERS	00
26	ADVANCED Digitals Inputs - 6 FEEDERS	00
27	ADVANCED Digitals Inputs - 6 FEEDERS	00
28	ADVANCED Digitals Inputs - 6 FEEDERS	00
29	ADVANCED Digitals Inputs - 6 FEEDERS	00
30	ADVANCED Digitals Inputs - 6 FEEDERS	00
31	ADVANCED Digitals Inputs - 6 FEEDERS	00
32	ADVANCED Digitals Inputs - 6 FEEDERS	00
33	ADVANCED Digitals Inputs - 6 FEEDERS	00
34	ADVANCED Digitals Inputs - 6 FEEDERS	00
35	ADVANCED Digitals Inputs - 6 FEEDERS	00
36	ADVANCED Digitals Inputs - 6 FEEDERS	00
37	ADVANCED Digitals Inputs - 6 FEEDERS	00
38	ADVANCED Digitals Inputs - 6 FEEDERS	00
39	ADVANCED Digitals Inputs - 6 FEEDERS	00
40	ADVANCED Digitals Inputs - 6 FEEDERS	00
41	ADVANCED Digitals Ouputs - 6 FEEDERS	00
42	ADVANCED Digitals Ouputs - 6 FEEDERS	00

The technical information contained in this document is the exclusive property of Schneider Electric Industries S.A.S and cannot be used or disclosed to third parties of any kind without its written consent. Only those drawings and diagrams marked "released for manufacturing" are to be used for production purposes. All devices shown in the diagrams are in open position, drawn out with operating mechanism discharged and all power sources off.

Les informations techniques contenues dans ce document sont la propriete exclusive de Schneider Electric Industries S.A.S et ne peuvent etre utilisees ou divulguees a des tiers quels qu'ils soient sans son accord ecrit. Seuls nous engagent les dessins marqués "pour fabrication" et ceux qui seront fournis en reponse a une commande. Les appareils representes sur ce schéma sont en position ouvert - désarmés - débrochés - toutes sources coupées.

Archivage
Microfilmed

LIST OF SHEETS

GRID MONITORING CONTROL CAB.
(GRID MCC)
ADVANCED 6 FEEDERS

Released for Manufacturing
Printed on 2014/03/10

Schneider Electric

EAV5829303

Projet - No commande Project - Order No.	Indice Rev	Folio Sheet
	00	02

Folio Sheet	Designation Designation	Indice de modification Revision
43	ADVANCED Digitals Ouputs - 6 FEEDERS	00
44	ADVANCED Digitals Ouputs - 6 FEEDERS	00
45	ADVANCED Digitals Ouputs - 6 FEEDERS	00
46	ADVANCED Digitals Ouputs - 6 FEEDERS	00
47	ADVANCED Digitals Ouputs - 6 FEEDERS	00
48	ADVANCED Digitals Ouputs - 6 FEEDERS	00
49	ADVANCED WS Analog Inputs	00
50	ADVANCED WS Analog Inputs	00
51	ADVANCED DCS Analog Inputs	00
52	ADVANCED DCS Analog Inputs	00
53	ADVANCED PT1000 Analog Inputs	00
54	ADVANCED Analog Outputs	00
150	TERMINAL BLOCK : =+MCC-X2	00
151	TERMINAL BLOCK : =+MCC-X3	00
152	TERMINAL BLOCK : =+MCC-X4	00
153	TERMINAL BLOCK : =+MCC-X10	00
154	TERMINAL BLOCK : =+MCC-X11	00
155	TERMINAL BLOCK : =+MCC-X21	00
156	TERMINAL BLOCK : =+MCC-X22	00
157	TERMINAL BLOCK : =+MCC-X23	00
158	TERMINAL BLOCK : =+MCC-X24	00
159	TERMINAL BLOCK : =+MCC-X25	00
160	TERMINAL BLOCK : =+MCC-X26	00
161	TERMINAL BLOCK : =+MCC-X51	00
162	TERMINAL BLOCK : =+MCC-X52	00
163	TERMINAL BLOCK : =+MCC-X53	00
164	TERMINAL BLOCK : =+MCC-X54	00
500	EQUIPMENT LIST	00
501	EQUIPMENT LIST	00
502	EQUIPMENT LIST	00

The technical information contained in this document is the exclusive property of Schneider Electric Industries S.A.S and cannot be used or disclosed to third parties of any kind without its written consent. Only those drawings and diagrams marked "released for manufacturing" are to be used for work purposes. All devices shown in this drawing are in open position, drawn out with operating mechanism discharged and all power sources off.

Les informations techniques contenues dans ce document sont la propriete exclusive de Schneider Electric Industries S.A.S et ne peuvent etre utilisees ou divulguees a des tiers quels qu'ils soient sans son accord ecrit. Seuls nous engageant pour ce document les plans et schemas mis a disposition pour realisation marques "a fin de fabrication" sur ce schéma sont en position ouvert - désarmés - débrochés - toutes sources coupées.

Archivage
Microfilmed

LIST OF SHEETS

GRID MONITORING CONTROL CAB.
(GRID MCC)
ADVANCED 6 FEEDERS

Released for Manufacturing
Printed on 2014/03/10

Schneider Electric

EAV5829303

Projet - No commande Project - Order No.	Indice Rev	Folio Sheet
	00	03

A3 recap 1 - 11/2006

SYMBOLE SYMBOL	CODE	LEGENDE DESCRIPTION	SYMBOLE SYMBOL	CODE	LEGENDE DESCRIPTION	SYMBOLE SYMBOL	CODE	LEGENDE DESCRIPTION
		CONTACT A FERMETURE MAKE CONTACT			DISPOSITIF D'ACCROCHAGE EN PRISE DEVICE FOR RESTRICTING MOVEMENT BLOCKED POSITION		G	ELEMENT DE PILE OU ACCUMULATEUR PRIMARU CELL OR ACCUMULATOR
		CONTACT A OUVERTURE BREAK CONTACT			DISPOSITIF D'ACCROCHAGE LIBERE DEVICE FOR RESTRICTING MOVEMENT UNBLOCKED POSITION			
		CONTACT INVERSEUR CHANGE OVER CONTACT			TERRE DE PROTECTION EARTH PROTECTION		H	LAMPE DE SIGNALISATION SIGNAL LAMP
		CONTACT NO TEMPORISE AU TRAVAIL MAKE CONTACT DELAY WHEN OPERATING			TERRE FONCTIONNELLE FUNCTIONNAL EARTH		H	VOYANT MECANIQUE DE SIGNALISATION MECHANICAL INDICATOR
		CONTACT NF TEMPORISE AU TRAVAIL BREAK CONTACT DELAY WHEN OPERATING			TERRE EARTH		H	AVERTISSEUR HORN
		CONTACT NO TEMPORISE AU REPOS MAKE CONTACT DELAY WHEN RELEASING	P	B	COMMANDE PAR PRESSION OPERATED BY PRESSURE		H	SONNERIE HORN
		CONTACT NF TEMPORISE AU REPOS MAKE CONTACT DELAY WHEN RELEASING	U	B	COMMANDE PAR TEMPERATURE OPERATED BY TEMPERATURE			
		CONTACT DE PASSAGE A LA FERMETURE PASSING MAKE CONTACT CLOSING NOMENTARILY DURING OPERATION	h	B	COMMANDE PAR NIVEAU OPERATED BY LEVEL		KA	RELAIS - ORGANE DE COMMANDE RELAY - COIL
		CONTACT DE PASSAGE A L'OUVERTURE PASSING BREAK CONTACT CLOSING NOMENTARILY DURING OPERATION					KA	RELAIS A MISE AU REPOS RETARDEE SLOW RELEASING RELAY COIL
		CONTACT A FERMETURE ANTERIEURE AUX AUTRES CONTACTS DE L'ENSEMBLE MAKE CONTACT WICH OPERATES EARLIER RELATIVE TO THE ASSEMBLY OF CONTACT		C	CAPACITE - CONDENSATEUR CAPACITANCE - CAPACITOR		KA	RELAIS A MISE AU TRAVAIL RETARDEE SLOW OPERATING RELAY COIL
		CONTACT A FERMETURE POSTERIEURE AUX AUTRES CONTACTS DE L'ENSEMBLE MAKE CONTACT WICH OPERATES LATER RELATIVE TO THE ASSEMBLY OF CONTACT	QFO.10	E	RESISTANCE DE CHAUFFAGE HEATING RESISTOR		KM	CONTACTEUR CONTACTOR
Q2		CONTACT A OUVERTURE POSTERIEURE AUX AUTRES CONTACTS DE L'ENSEMBLE BREAK CONTACT WICH OPERATES LATER RELATIVE TO THE ASSEMBLY OF CONTACT						
		CONTACT A OUVERTURE ANTERIEURE AUX AUTRES CONTACTS DE L'ENSEMBLE MAKE CONTACT WICH OPERATES EARLIER RELATIVE TO THE ASSEMBLY OF CONTACT		F	PARAFOUDRE LIGHTNING ARRESTER		P	INDICATEUR - SYMBOLE GENERAL INDICATING INSTRUMENT - GENERAL SYMBOL
		DISPOSITIF D'EMBROCHAGE WITHDRAWABLE DEVICE		F	COUPE CIRCUIT FUSE		P	ENREGISTREUR- SYMBOLE GENERAL RECORDING INSTRUMENT - GENERAL SYMBOL
		VERROUILLAGE MECANIQUE MECHANICAL INTERLOCK		F	DETECTION DE SURINTENSITE - EFFET THERMIQUE OVERCURRENT DETECTION - THERMAL EFFECT		P	COMPTEUR- SYMBOLE GENERAL INTEGRATING METER - GENERAL SYMBOL
		ENROULEMENT WINDING		F	DETECTION DE SURINTENSITE - EFFET MAGNETIQUE OVERCURRENT DETECTION - MAGNETIC EFFECT			

The technical information contained in this document is the exclusive property of Schneider Electric Industries S.A.S and cannot be used or disclosed to third parties of any kind without its written consent. Only those drawings and diagrams marked "certified" are intended for execution. All devices shown in the diagrams are in open position, drawn out with operating mechanism discharged and all power sources off.

Les informations techniques contenues dans ce document sont la propriete exclusive de Schneider Electric Industries S.A.S et ne peuvent etre utilisees ou divulguees a des tiers quels qu'ils soient sans son accord ecrit. Seuls nous engagent ceux marqués "certifiés". Les appareils représentés sur ce schéma sont en position ouvert - désarmés - débrochés - toutes sources coupées.

Ind. Rev	Date Date		Archiv. Micro-filmed	Ind. Rev	Date Date		Archiv. Micro-filmed
00	17/03/2014	Edition originale / First issue					

Modification / Modification

LEGEND OF SYMBOLS
Part 1

GRID MONITORING CONTROL CAB.
(GRID MCC)
ADVANCED 6 FEEDERS

Schneider Electric

Released for Manufacturing
Printed on 2014/03/19

EAV5829303

Projet - No commande Project - Order No.	Indice Rev	Folio Sheet
	00	04

A3 suite - 11/2006

SYMBOLE SYMBOL	CODE	LEGENDE DESCRIPTION	SYMBOLE SYMBOL	CODE	LEGENDE DESCRIPTION	SYMBOLE SYMBOL	CODE	LEGENDE DESCRIPTION
	Q	INTERRUPTEUR SWITCH		S	COMMANDE PAR LEVIER OPERATED BY LEVER		U	CONVERTISSEUR TRANSDUCER
	Q	DISJONCTEUR CIRCUIT BREAKER		S	COMMANDE PAR CLEF OPERATED BY KEY			
	Q	SECTIONNEUR DISCONNECTOR (ISOLATOR)		S	TL OU TPL POUR SECTIONNEUR DISCREPANCY SWITCH FOR DISCONNECTOR		V	FONCTION REDRESSEUSE RECTIFYING FUNCTION
	Q	INTERRUPTEUR SECTIONNEUR SWITCH DISCONNECTOR		S	TL OU TPL POUR DISJONTEUR DISCREPANCY SWITCH FOR CB			
	Q	COMMANDE PAR MOTEUR OPERATED BY MOTOR		S	BOITIER DE SIGNALISATION ALARM ANNUNCIATOR			
	R	SHUNT SHUNT		T	TRANSFORMATEUR DE COURANT UNIIFILAIRE CURRENT TRANSFORMER SLD		X	BOITE D'ESSAI TEST BLOCK
	R	RESISTANCE RESISTOR		T	TRANSFORMATEUR DE COURANT MULTIFILAIRE CURRENT TRANSFORMER TRIPOLAR DRAWING		X	BORNE SIMPLE ORDINARY TERMINAL BLOCK
				T	TRANSFORMATEUR DE TENSION MULTIFILAIRE VOLTAGE TRANSFORMER TRIPOLAR DRAWING		X	BORNE SECTIONABLE INTERRUPTIBLE TERMINAL BLOCK
	S	CONTACT DE POSITION NO MAKE CONTACT OF LIMIT SWITCH		T	ENROULEMENT DE TRANFORMATEUR DE PUISSANCE - MULTIFILAIRE POWER TRANSFORMER WINDING - TRIPOLAR DRAWING		X	BORNE FUSIBLE FUSE CARIER TERMINAL BLOCK
	S	CONTACT DE POSITION NF BREAK CONTACT OF LIMIT SWITCH		T	ENROULEMENT DE TRANFORMATEUR DE PUISSANCE - MULTIFILAIRE POWER TRANSFORMER WINDING - TRIPOLAR DRAWING		X	BORNE DIODE DIODE TERMINAL BLOCK
	S	COMMUTATEUR UNIPOLAIRE A N DIRECTIONS SINGLE POLE N POSITIONS SWITCH		T	TRANFORMATEUR DE PUISSANCE - UNIFILAIRE POWER TRANSFORMER - SLD		X	BORNE RESISTANCE RESISTOR TERMINAL BLOCK
	S	COMMANDE PAR POUSSOIR OPERATED BY PUSHING		T	AUTOTRANFORMATEUR DE PUISSANCE - UNIFILAIRE POWER AUTOTRANSFORMER WINDING - SLD		X	BROCHE MALE DE CONNECTEUR MAL CONNECTOR PIN
	S	COMMANDE PAR TIRETTE OPERATED BY PULLING		T	TRANSFORMATEUR D'ISOLEMENT ISOLATING TRANSFORMER		X	BROCHE FEMELLE DE CONNECTEUR FEMALE CONNECTOR PIN
	S	COMMANDE ROTATIVE OPERATED BY TURNING						
	S	BOUTON POUSSOIR COUP DE POING EMERGENCY SWITCH						

The technical information contained in this document is the exclusive property of Schneider Electric Industries S.A.S and cannot be used or disclosed to third parties of any kind without its written consent. Only those drawings and diagrams specifically agreed upon in writing are to be used for execution. All drawings and diagrams are in open position, drawn out with operating mechanism discharged and all power sources off.

Les informations techniques contenues dans ce document sont la propriete exclusive de Schneider Electric Industries S.A.S et ne peuvent etre utilisees ou divulguees a des tiers quels qu'ils soient sans son accord ecrit. Seuls nous engagent ceux ecrits et signes. Les plans et schemas ne sont valables qu'avec les appareils representes sur ce schéma sont en position ouvert - désarmés - débrochés - toutes sources coupées.

Ind. Rev	Date Date		Archiv. Micro-filmed	Ind. Rev	Date Date		Archiv. Micro-filmed
00	17/03/2014	Edition originale / First issue					
		Modification / Modification				Modification / Modification	

LEGEND OF SYMBOLS
Part 2

GRID MONITORING CONTROL CAB.
(GRID MCC)
ADVANCED 6 FEEDERS

Schneider Electric

Released for Manufacturing
Printed on 2014/03/19

EAV5829303

Projet - No commande Project - Order No.	Indice Rev	Folio Sheet
	00	05

A3 suite - 11/2006

The technical information contained in this document is the exclusive property of Schneider Electric Industries S.A.S and cannot be used or disclosed to third parties of any kind without its written consent. Only those drawings and information specifically referred to in the contract may be used in connection with the execution of the contract and are in open position, drawn out with operating mechanism discharged and all power sources off.

Les informations techniques contenues dans ce document sont la propriete exclusive de Schneider Electric Industries S.A.S et ne peuvent etre utilisees ou divulguees a des tiers quels qu'ils soient sans son accord ecrit. Seuls nous engageant ont ete prevues les pieces ecrites et dessinees, les organes de commande et les appareils representes sur ce schéma sont en position ouvert - désarmés - débrochés - toutes sources coupées.

LE REPERAGE DES APPAREILS EST CONFORME A LA NORME CEI. ADDITION DE 4 BLOCS DE CARACTERES

= ANN	+ AANN	- AA*N*N	: CC*C*
bloc 1*	bloc 2	bloc 3	bloc 4

A = Alphabétique
N = Numérique
C = Alphanumérique
* = facultatif

Ex : =D01 +AB01 -KA1 :13

- :13 — repère du N° de borne
- -KA1 — repère du matériel (racine et n° d'ordre)
- +AB01 — repère de l'emplacement physiquel (zone ; localisation)
- =D01 — repère essentiel (ensemble ou fonction)

bloc 1 =ANN — "=" symbole distinctif — repère essentiel

Repère principal caractérisant chaque subdivision importante d'une installation ou ensemble (fonctionnel). Il est facultatif.
Le 1° caractère est choisi dans la "TABLE 1.
Cette table donne les lettres repères des niveaux de tension et des fonctions non spécifiques à une travée ou un niveau de tension.

bloc 2 +AANN — "+" symbole distinctif — repère de l'emplacement physique

Repère de l'adresse physique du matériel.
Repère de l'équipement qui contient le matériel (choix des deux premiers caractères dans la "TABLE 2").

bloc 3 -AA*N*N — "-" symbole distinctif — repère matériel

Repère complet du nom de l'appareil. La première lettre indique la fonction générale de l'appareil. Choix "TABLE 3".

bloc 4 :CC*C* — ":" symbole distinctif — repère du N° de borne

Repère composé indifféremment de lettres ou de chiffres.

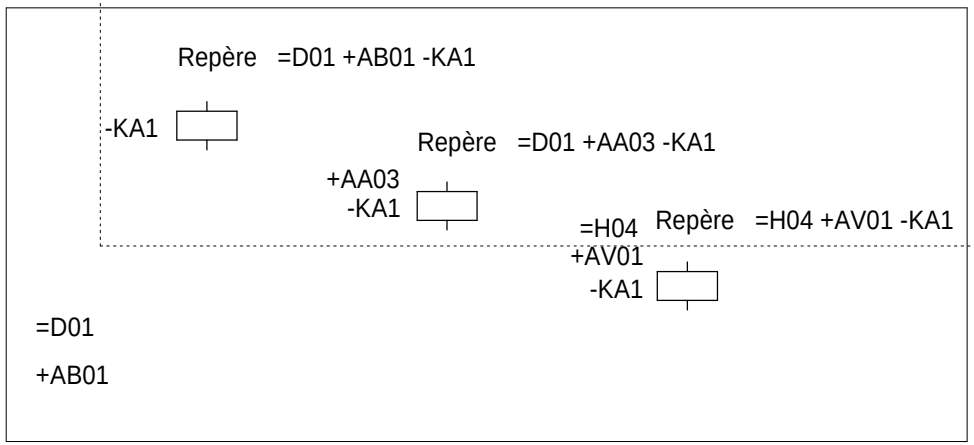

ACCORDING TO STANDARD, MARKING OF EQUIPMENTS IS MADE WITH 4 BLOCKS OF CHARACTERS

= ANN	+ AANN	- AA*N*N	: CC*C*
block 1*	block 2	block 3	block 4

A = Alphabetic
N = Numeric
C = Alphanumeric
* = optional

Ex : =D01 +AB01 -KA1 :13

- :13 — terminal designation
- -KA1 — identification of item (root & sequence N°)
- +AB01 — location of item (zone ; location)
- =D01 — higher-level designation (set or function)

block 1 =ANN — "=" distinctive symbol — higher level designation

Item designation for any major part of plant or function. Optional.
First character is given by "TABLE 1".
This table gives codes for voltage levels and for no attached functions to a particular bay or voltage level.

block 2 +AANN — "+" distinctive symbol — location of item

Designation for location item.
Indicates equipment wich conttains the item (choice of the 2 first characters "TABLE 2").

block 3 -AA*N*N — "-" distinctive symbol — identification of item

Complete designation of item identification. 1st character indicates general function of item. Choice "TABLE 3".

block 4 :CC*C* — ":" distinctive symbol — terminal designation

Designation composed of letters or numbers.

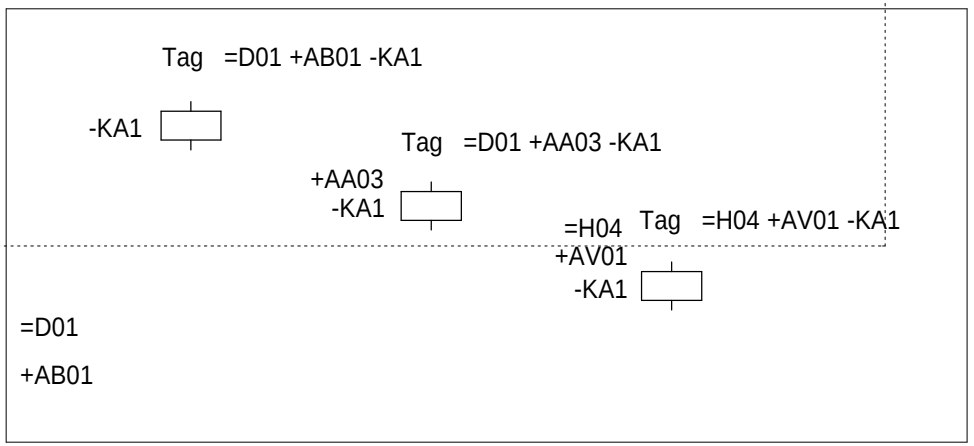

Ind. Rev	Date Date		Archiv. Micro-filmed	Ind. Rev	Date Date	Modification / Modification	Archiv. Micro-filmed
00	17/03/2014	Edition originale / First issue					

MARKING

GRID MONITORING CONTROL CAB.
(GRID MCC)
ADVANCED 6 FEEDERS

Schneider Electric

Released for Manufacturing
Printed on 2014/03/19

EAV5829303

Projet - No commande / Project - Order No.	Indice Rev	Folio Sheet
	00	06

A3 suite - 11/2006

NIVEAUX DE TENSION

LETTRES	TENSIONS
B	> 420kV
C	380 à 419kV
D	220 à 379kV
E	110 à 219kV
F	60 à 109kV
G	45 à 59kV
H	30 à 44kV
J	20 à 29kV
K	10 à 19kV
L	6 à 9kV
M	1 à 5kV
N0	500 - 999VCA
N1	300 - 499VCA
N2	50 - 299VCA
N3	< 49VCA
N5	> 250VCC
N6	150 - 249VCC
N7	50 - 149VCC
N8	25 - 49VCC
N9	< 24VCC

FONCTIONS NON SPECIFIQUES A UNE TRAVEE OU A UN NIVEAU DE TENSION

LETTRES	FONCTIONS
Q	MESURE - COMPTAGE - ENREGISTREMENT
R	PROTECTIONS
S	ECLAIRAGE - CLIMATISATION - INSTAL DOMESTIQUE
T	TRANSFORMATEUR
U	COMMUNS - TRANCHE GENERALE
V	
W	INTERFACES
X	CONSIGNATEURS - OSCILLOPERTURBOGRAPHE
Y	SYSTEME TELECOMMUNICATION
Z	CABLE

Le numéro de la travée est donné par deux chiffres caractéristiques de 01 à 99.
Les chiffres "00" sont utilisés pour les équipements communs à un niveau de tension et plusieurs travées.

ex : =E00, repère essentiel de l'ensemble fonctionnel commun à toutes les travées 132kV.
+E00.AB01, armoire de relayage N°1 (protection bar re)

EXEMPLES : +E04 Indique que l'emplacement appartient en totalité à la travée 110kV N°04
=C05 Indique la travée 400kV N°05
=R01 Indique l'ensemble fonctionnel "PROTECTION INCENDIE" N°01

LEVEL VOLTAGE

LETTRES	VOLTAGE
B	> 420kV
C	380 à 419kV
D	220 à 379kV
E	110 à 219kV
F	60 à 109kV
G	45 à 59kV
H	30 à 44kV
J	20 à 29kV
K	10 à 19kV
L	6 à 9kV
M	1 à 5kV
N0	500 - 999VAC
N1	300 - 499VAC
N2	50 - 299VAC
N3	< 49VAC
N5	> 250VDC
N6	150 - 249VDC
N7	50 - 149VDC
N8	25 - 49VDC
N9	< 24VDC

NO ATTACHED FUNCTIONS TO A PARTICULAR BAY OR A VOLTAGE LEVEL

LETTRES	VOLTAGE
Q	MEASURING - RECORDING - METERING
R	PROTECTIONS
S	LIGHTING, AIR CONDITIONING, DOMESTIC
T	TRANSFORMER
U	COMMONS
V	
W	INTERFACES
X	EVENTS & FAULT RECORDER, SUPERVISION
Y	TELECOMMUNICATION SYSTEM, ALARMS STATUS
Z	CABLE

Bay number is given by two figures from 01 to 99.
Figures "00" are used for common equipment to a voltage level and several bays

eg ; =E00, higher level of designation 132kV busbar
+E00, AB01, 132kV common relaying cubicle N°1 (bus bar protection)

EXAMPLES : +E04 Indicates that the localisation is fully attached to bay 110kV N°04
=C05 Indicates bay 400kV N°05
=R01 Indicates the function "FIRE PROTECTION" N° 01

The technical information contained in this document is the exclusive property of Schneider Electric Industries S.A.S and cannot be used or disclosed to third parties of any kind without its written consent. Only those drawings and diagrams bearing the mention "Released for Manufacturing" are to be used for the purpose of manufacturing. Drawings are in open position, drawn out with operating mechanism discharged and all power sources off.

Les informations techniques contenues dans ce document sont la propriete exclusive de Schneider Electric Industries S.A.S et ne peuvent etre utilisees ou divulguees a des tiers quels qu'ils soient sans son accord ecrit. Seuls nous engagent ceux dessins portant la mention "Bon pour fabrication" et ceux ayant fait l'objet d'une commande. Les appareils representes sur ce schéma sont en position ouvert - désarmés - débrochés - toutes sources coupées.

Ind. Rev	Date Date		Archiv. Micro-filmed	Ind. Rev	Date Date	Modification / Modification	Archiv. Micro-filmed
00	17/03/2014	Edition originale / First issue					

HIGHER LEVEL DESIGNATION

GRID MONITORING CONTROL CAB.
(GRID MCC)
ADVANCED 6 FEEDERS

Schneider Electric

Released for Manufacturing
Printed on 2014/03/19

EAV5829303

Projet - No commande / Project - Order No.	Indice Rev	Folio Sheet
	00	07

A3 suite - 01/2008

CODE	DESIGNATION
AC	Tableau de commande et protection Control and relay board
AD	Tableau de comptage - mesure Metering - Measuring board
AE	Armoire enregistreur de pertubations Fault recorder cubicle
AF	Armoire de travée Marshalling kiosk
AG	Coffret intensité Current box
AH	Coffret tension Voltage box
AJ	Armoire - coffret d'éclairage Lighting cubicle - box
AL	Armoire monitoring de livraison (PDL) Monitoring delivery board (PDL)
AM	Coffret auxiliaires transformateur Transformer auxiliaries box
AN	Coffret régleur transformateur On load tap changer box
AO	Armoire / coffret synchro Synchro panel
AP	Armoire monitoring de transformation (PTR) Monitoring transformer board (PTR)

CODE	DESIGNATION
AQ	Armoire contrôle et régulation tension du transformateur Transformer auto voltage regulation cubicle
AS	Armoire auxiliaires courant alternatif AC low voltage auxiliaries cubicle
AT	Armoire auxiliaires courant continu DC low voltage auxiliaries cubicle
AU	Armoire auxiliaires groupe de secours Emergency generator auxiliaries cubicle
AV	Caisson-coffret BT des cellules MT MV SWGR low voltage cubicle-box
AW	Armoire des auxiliaires disjoncteur Circuit breaker auxiliaries cubicle
AX	Armoire des auxiliaires sectionneur Disconnecting switch auxiliaries cubicle

The technical information contained in this document is the exclusive property of Schneider Electric Industries S.A.S and cannot be used or disclosed to third parties of any kind without its written consent. Only those drawings and diagrams marked "for construction" or "for approval" may be used for construction purposes. All drawings show the voltages are in open position, drawn out with operating mechanism discharged and all power sources off.

Les informations techniques contenues dans ce document sont la propriete exclusive de Schneider Electric Industries S.A.S et ne peuvent etre utilisees ou divulguees a des tiers quels qu'ils soient sans son accord ecrit. Seuls nous engageant sur ce schéma sont en position ouvert - désarmés - débrochés - toutes sources coupées.

Ind. Rev	Date Date		Archiv. Micro-filmed	Ind. Rev	Date Date		Archiv. Micro-filmed
00	17/03/2014	Edition originale / First issue					

LOCATION IDENTIFICATION

GRID MONITORING CONTROL CAB.
(GRID MCC)
ADVANCED 6 FEEDERS

Schneider Electric

Released for Manufacturing
Printed on 2014/03/19

EAV5829303

Projet - No commande Project - Order No.	Indice Rev	Folio Sheet
	00	08

A3 suite - 01/2008

CODE	DESIGNATION - (Famille de symbole) / (Family of symbol)
A	Ensemble, Sous-ensemble - (démarreur de moteur, automates) Assemblie, Subassemblie - (motor starter, programmable logic device)
B	Transducteur de grandeur non électrique en grandeur électrique - (détecteur, capteur) Transducer from non electrical to electrical quantity - (detector, sensor)
C	Condensateur Capacitor
D	Operateur binaire, Mise en mémoire, Temporisation Binary operator, Storage device delay, Delay device
E	Matériel divers - (chauffage, éclairage, divers) Miscellaneous - (heating, lighting, various)
F	Dispositif de protection - (fusible, protection, relais thermique & magnétique, relais de mesure) Protective device - (fuse, thermal & magnetic relay, measuring relay)
G	Générateur, Alimentation de puissance - (générateur, batterie) Generator, Power supply - (generator, battery)
H	Dispositif de signalisation - (signalisation) Signalling device - (signalling)
KA	Relais, Contacteur - (relais auxiliaire, contact) Relay, Contactor - (auxiliairy relay, contact)
KM	Relais, Contacteur - (contacteur de puissance, contact) Relay, Contactor - (power contactor, contact)
L	Reactance - (inductance) Reactor - (inductance)
M	Moteur Motor
N	Dispositif analogique-numérique Analogue digital device
P	Instruments de mesure - (appareil de mesure, indicateur, enregistreur) Measuring equipment - (measuring instrument)
Q	Appareil de connexion pour circuit de puissance - (disjoncteur, interrupteur, sectionneur, contacteur disj) Switching device for power circuit - (circuit breaker,switch, disconnector,circuit breaker contactor)

CODE	DESIGNATION - (Famille de symbole) / (Family of symbol)
R	Résistance - (résistance, shunt) Resistor - (resistor, shunt)
S	Appareil de connexion pour circuit de conduite, Selecteur - (bouton, commutateur,fin de course) Switching device for control, Circuit-selector - (button, turn switch, limit switch)
T	Transformateur Transformer
U	Transducteur, Convertisseur Transducer, Converter
V	Semiconducteur Semiconductor
W	Conducteur - Câble Conductor - Cable
X	Bornes - (prise de courant, répartiteur, borne) Terminals - (plug-in soket, distributor, terminal)
Y	Appareil mécanique actionné électriquement - (frein, électrovane) Electrical operated mechanical device - (brake, electrovalve)
Z	Régulateur, Filtre, Correcteur Regulator, Filter, Compandor

The technical information contained in this document is the exclusive property of Schneider Electric Industries S.A.S and cannot be used or disclosed to third parties of any kind without its written consent. Only those drawings and diagrams marked "released for manufacturing" are to be used for execution. All devices shown in the diagrams are in open position, drawn out with operating mechanism discharged and all power sources off.

Les informations techniques contenues dans ce document sont la propriete exclusive de Schneider Electric Industries S.A.S et ne peuvent etre utilisees ou divulguees a des tiers quels qu'ils soient sans son accord ecrit. Seuls nous engageant les dessins marques "pour fabrication" et ceux ou les appareils sont representes sur ce schéma sont en position ouvert - désarmés - débrochés - toutes sources coupées.

Ind. Rev	Date Date		Archiv. Micro-filmed	Ind. Rev	Date Date	Modification / Modification	Archiv. Micro-filmed
00	17/03/2014	Edition originale / First issue					

DEVICES IDENTIFICATION

GRID MONITORING CONTROL CAB.
(GRID MCC)
ADVANCED 6 FEEDERS

Released for Manufacturing
Printed on 2014/03/19

Schneider Electric

EAV5829303

Projet - No commande Project - Order No.	Indice Rev	Folio Sheet
	00	09

A3 suite - 01/2008

CODE	DESIGNATION - (Famille de symbole) / (Family of symbol)
INTi	TELEFAST ABE7 Sub-base i
APjRk	Programmable Automat j Rack k
XF01	OPTICAL Box 1
WO00i	OPTICAL FIBER Cord i
WET00i	ETHERNET TCP/IP Cord i
WM00i	RS485 MODBUS Serial Cord i
WINTi	TELEFAST ABE7 Sub-bases Cord i

CODE	DESIGNATION - (Famille de symbole) / (Family of symbol)

=
+MCC

The technical information contained in this document is the exclusive propery of Schneider Electric Industries S.A.S and cannot be used or disclosed to third parties of any kind without its written consent. Only those drawings and diagrams marked "released for order" are valid for execution. All devices shown in this diagrams are in open position, drawn out with operating mechanism discharged and all power sources off.

Les informations techniques contenues dans ce document sont la propriete exclusive de Schneider Electric Industries S.A.S et ne peuvent etre utilisees ou divulguees a des tiers quels qu'ils soient sans son accord ecrit. Seuls nous engageant sur ce schéma sont en position ouvert - désarmés - débrochés - toutes sources coupées.

Ind. Rev	Date Date		Archiv. Micro-filmed	Ind. Rev	Date Date		Archiv. Micro-filmed
00	17/03/2014	Edition originale / First issue					

SPECIFIC DEVICES IDENTIFICATION

GRID MONITORING CONTROL CAB.
(GRID MCC)
ADVANCED 6 FEEDERS

Schneider Electric

Released for Manufacturing
Printed on 2014/03/19

EAV5829303

Projet - No commande / Project - Order No.	Indice / Rev	Folio / Sheet
	00	10

A3 suite - 01/2008

WIRING IDENTIFICATION

POWER WIRING

400V ALTERNATIF CURRENT

PHASE : BLACK

NEUTRAL : B LUE

230V ALTERNATIF CURRENT

PHASE : RED

NEUTRAL : BLUE

EARTH PROTECTION

PE : GREEN / YELLOW

CONTROL WIRING

15V or 24 DIRECT CURRENT :

+15V o r + 24V : RED

-15V o r -24 V : W HITE GROUND or 0V : GREEN

CONTROL CIRCUIT SUPPLY BY AN EXTERNAL SOURCE : ORANGE

INSTRUMENTATION WIRING

SEE DETAILS IN SPECIFIC CABLES LIST

WIRES TYPE

H07V2K FOR THE CONTROL

H07V2K FOR THE POWER

SEE THE SPECIFIC CABLES LIST FOR THE INSTRUMENTATION

GENERAL

ONE WIRE FOR A TERMINAL BLOCK

MAXIMUM TWO PROTECTION WIRES MUST BE CONNECTED TO ONE BLOCK

MARK

LABEL TYPE

WIRING MARKING

MARK SHEET - NUMBER AT EACH END FOR CONNEXIONS

CIRCUIT BREAKER EX : Q1 : 1

TERMINAL NUMBER

DEVICE TYPE

TERMINAL BLOCK EX : X3 : 1

TERMINAL NUMBER

DEVICE TYPE

DEVICES MARKING

MARK ROOT - NUMBER

DEVICE EX : Q 1

DEVICE NUMBER

DEVICE TYPE

CORD AND CABLES MARKING

MARK ROOT - NUMBER

CABLE EXAMPLES :

ETHERNET TCP/IP CABLE 1 : WET 001

RS485 MODBUS SERIAL CABLE : WM 001

CABLE NUMBER

CABLE DESIGNATION

=

+MCC

The technical information contained in this document is the exclusive property of Schneider Electric Industries S.A.S and cannot be used or disclosed to third parties of any kind without its written consent. Only those drawings and diagrams marked "released for manufacturing" are intended for execution. All devices shown in the diagrams are in open position, drawn out with operating mechanism discharged and all power sources off.

Les informations techniques contenues dans ce document sont la propriete exclusive de Schneider Electric Industries S.A.S et ne peuvent etre utilisees ou divulguees a des tiers quels qu'ils soient sans son accord ecrit. Seuls nous engageant sur ce schéma sont en position ouvert - désarmés - débrochés - toutes sources coupées.

Ind. Rev	Date Date	Modification / Modification	Archiv. Micro-filmed	Ind. Rev	Date Date	Modification / Modification	Archiv. Micro-filmed
00	17/03/2014	Edition originale / First issue					

SPECIFIC IDENTIFICATION AND MARKING FOR DEVICES AND CORDS

GRID MONITORING CONTROL CAB. (GRID MCC) ADVANCED 6 FEEDERS

Schneider Electric

Released for Manufacturing
Printed on 2014/03/19

EAV5829303

Projet - No commande / Project - Order No.

Indice Rev 00

Folio Sheet 11

A3 suite - 01/2008

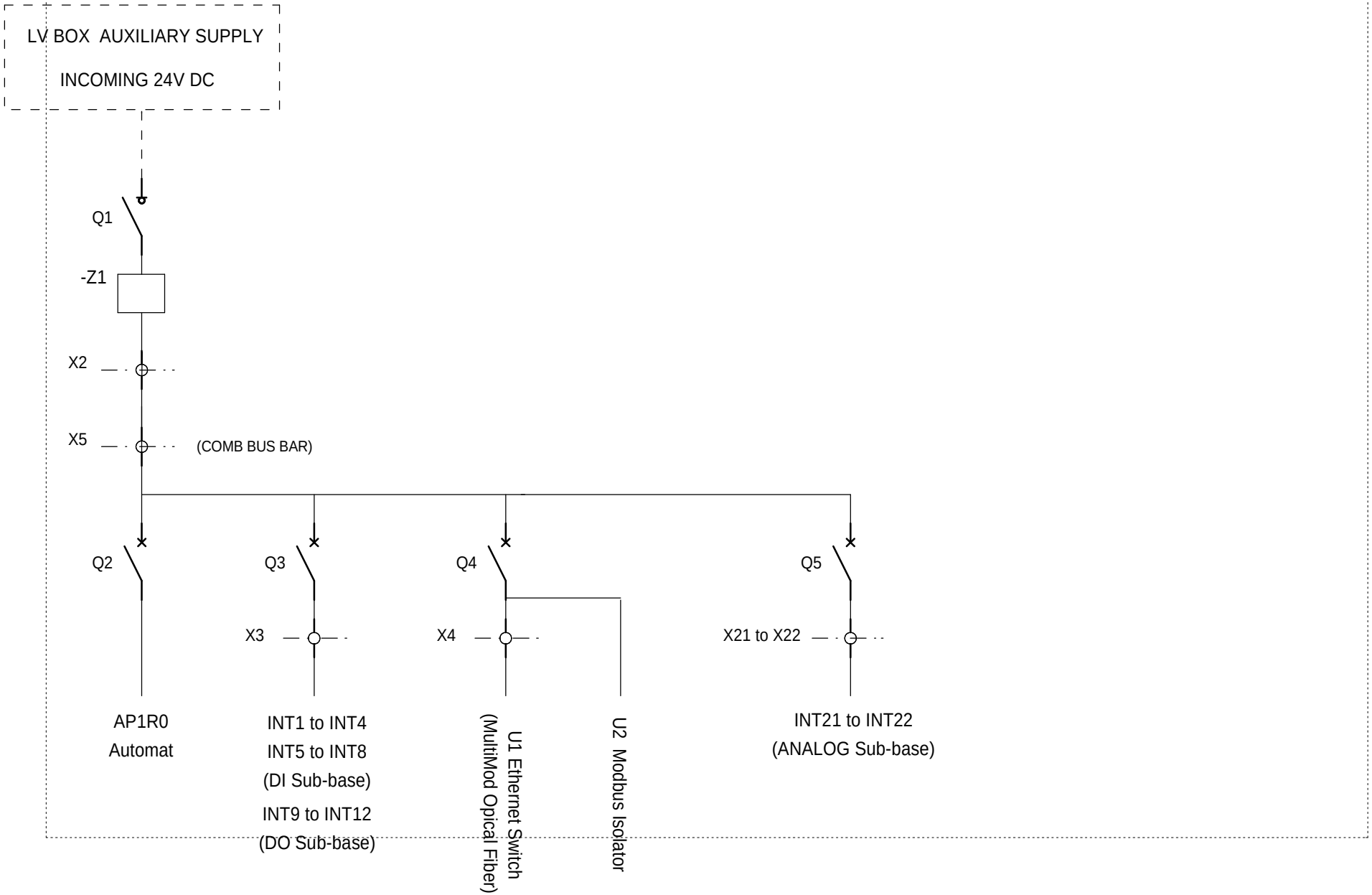

=
+MCC

The technical information contained in this document is the exclusive property of Schneider Electric Industries S.A.S and cannot be used or disclosed to third parties of any kind without its written consent. Only those drawings and diagrams marked "for construction" are to be used for execution. All diagrams are shown in the voltage free state and are in open position, drawn out with operating mechanism discharged and all power sources off.

Les informations techniques contenues dans ce document sont la propriete exclusive de Schneider Electric Industries S.A.S et ne peuvent etre utilisees ou divulguees a des tiers quels qu'ils soient sans son accord ecrit. Seuls nous engageant sur ce schéma sont en position ouvert - désarmés - débrochés - toutes sources coupées.

Ind. Rev	Date Date	Modification / Modification	Archiv. Micro-filmed	Ind. Rev	Date Date	Modification / Modification	Archiv. Micro-filmed
00	17/03/2014	Edition originale / First issue					

+24V DC POWER SUPPLY DIAGRAMM
- ADVANCED 6 FEEDERS

GRID MONITORING CONTROL CAB.
(GRID MCC)
ADVANCED 6 FEEDERS

Schneider Electric

Released for Manufacturing
Printed on 2014/03/19

EAV5829303

Projet - No commande Project - Order No.	Indice Rev	Folio Sheet
	00	12

A3 suite - 01/2008

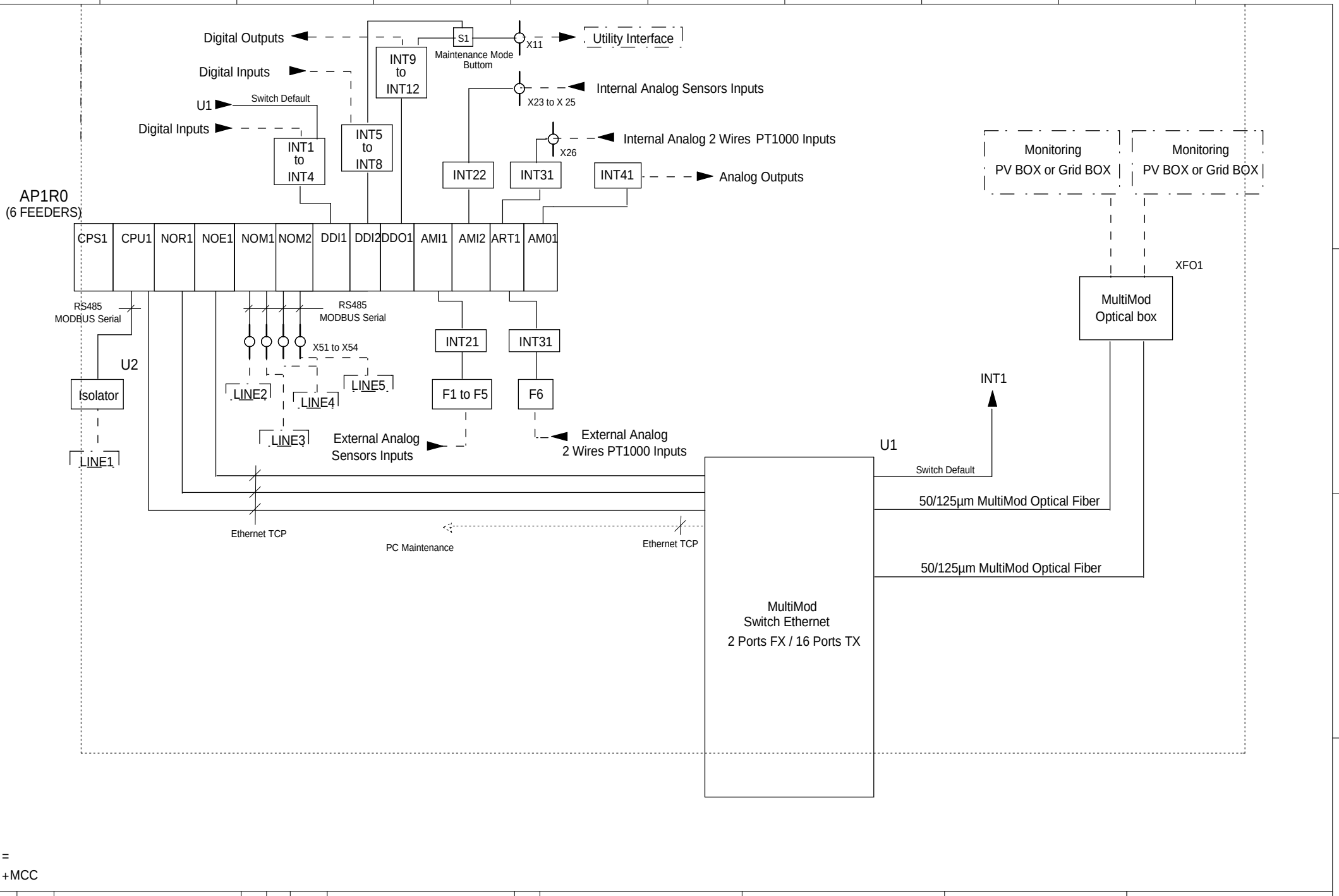

=
+MCC

The technical information contained in this document is the exclusive property of Schneider Electric Industries S.A.S and cannot be used or disclosed to third parties of any kind without its written consent. Only those drawings and diagrams contained in the contract documents, which are signed by the parties, are binding. All drawings are in open position, drawn out with operating mechanism discharged and all power sources off.

Les informations techniques contenues dans ce document sont la propriete exclusive de Schneider Electric Industries S.A.S et ne peuvent etre utilisees ou divulguees a des tiers quels qu'ils soient sans son accord ecrit. Seuls nous engageant ont ce schéma sont en position ouvert - désarmés - débrochés - toutes sources coupées.

Ind. Rev	Date Date		Archiv. Micro-filmed	Ind. Rev	Date Date	Modification / Modification	Archiv. Micro-filmed
00	17/03/2014	Edition originale / First issue					

MONITORING DIAGRAMM
- ADVANCED 6 FEEDERS

GRID MONITORING CONTROL CAB.
(GRID MCC)
ADVANCED 6 FEEDERS

Schneider Electric

Released for Manufacturing
Printed on 2014/03/19

EAV5829303

Projet - No commande Project - Order No.	Indice Rev	Folio Sheet
	00	13

A3 suite - 01/2008

The technical information contained in this document is the exclusive propery of Schneider Electric Industries S.A.S and cannot be used or disclosed to third parties of any kind without its written consent. Only those drawings and diagrams marked "released for manufacturing" are to be used for execution. All drawings shown in this document are in open position, drawn out with operating mechanism discharged and all power sources off.

Les informations techniques contenues dans ce document sont la propriete exclusive de Schneider Electric Industries S.A.S et ne peuvent etre utilisees ou divulguees a des tiers quels qu'ils soient sans son accord ecrit. Seuls nous engageant pour execution, les plans et schemas marqués "bon pour fabrication" et les dessins montrés dans ce document, les appareils representés sur ce schéma sont en position ouvert - désarmés - débrochés - toutes sources coupées.

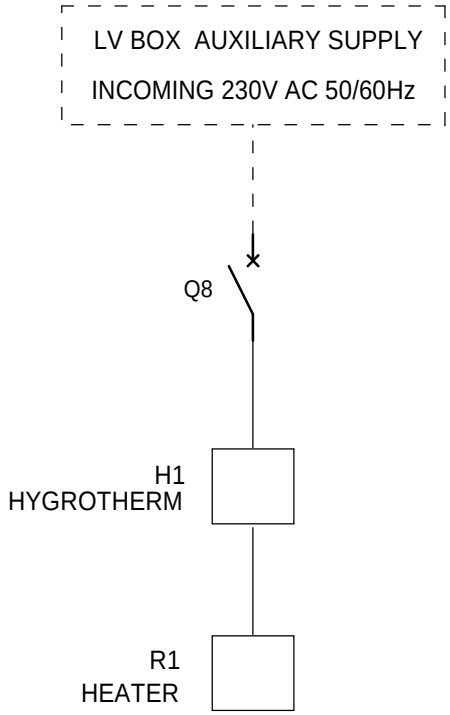

=MCC

Rev.	Date	Modification	Archiv. Micro-filmed	Rev.	Date	Modification	Archiv. Micro-filmed
00	17/03/2014	Edition originale					

230V AC POWER SUPPLY DIAGRAMM

GRID MONITORING CONTROL CAB.
(GRID MCC)
ADVANCED 6 FEEDERS

Schneider Electric

Released for Manufacturing
Printed on 2014/03/18

EAV5829303

Projet - Nom du Projet | Ordre de Marche | Indice Rev. 00 | Feuille Sheet 14

A3 E=mc² 05/2008

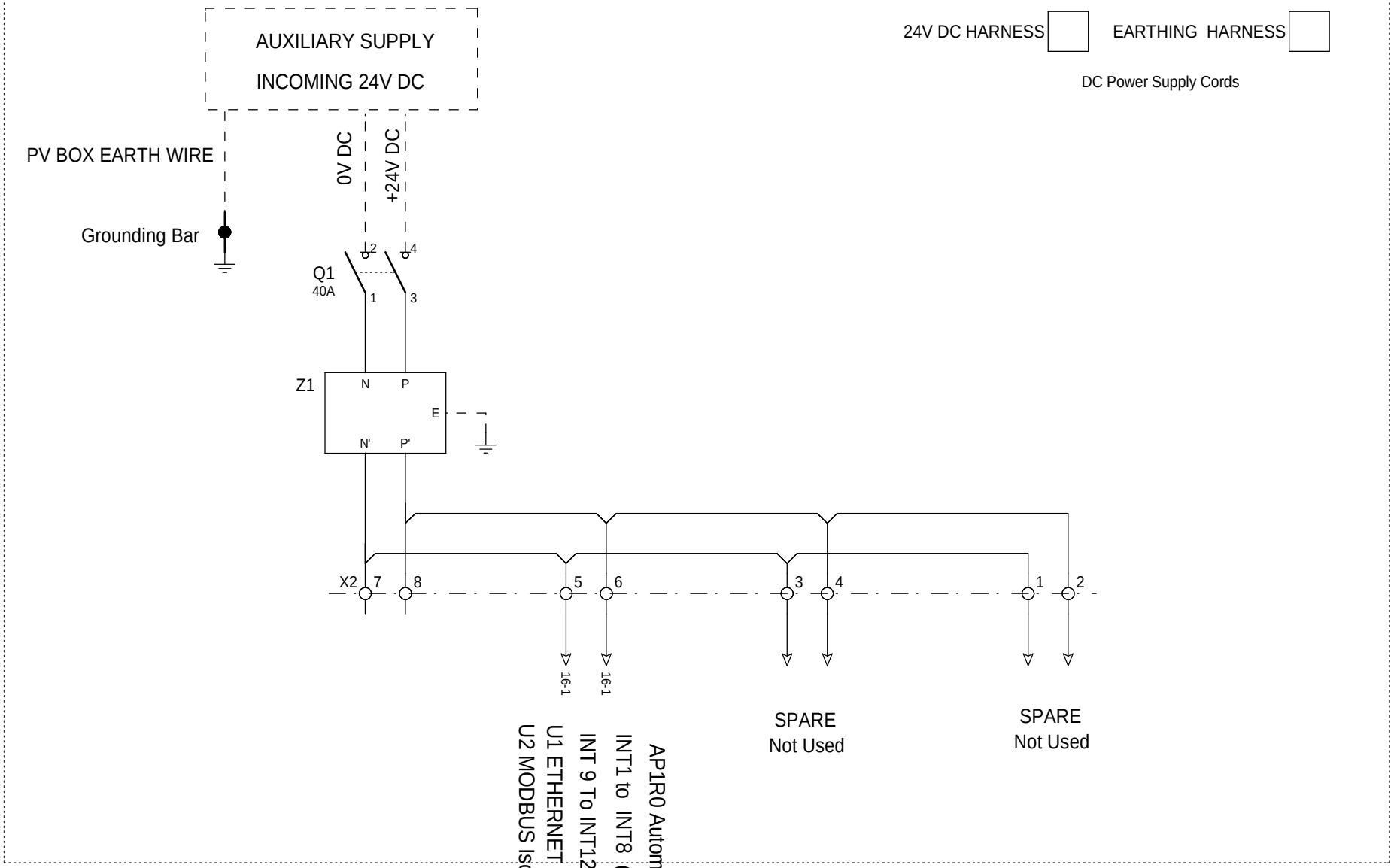

=
+MCC

The technical information contained in this document is the exclusive property of Schneider Electric Industries S.A.S and cannot be used or disclosed to third parties of any kind without its written consent. Only those drawings and diagrams marked "released for manufacturing" are to be used for execution purposes. All drawings should be in open position, drawn out with operating mechanism discharged and all power sources off.

Les informations techniques contenues dans ce document sont la propriete exclusive de Schneider Electric Industries S.A.S et ne peuvent etre utilisees ou divulguees a des tiers quels qu'ils soient sans son accord ecrit. Seuls nous engageant sur ce schéma sont en position ouvert - désarmés - débrochés - toutes sources coupées.

Ind. Rev	Date Date	Modification / Modification	Archiv. Micro-filmed	Ind. Rev	Date Date	Modification / Modification	Archiv. Micro-filmed
00	17/03/2014	Edition originale / First issue					

+24VDC POWER SUPPLY DISTRIBUTION
- ADVANCED 6 FEEDERS

GRID MONITORING CONTROL CAB.
(GRID MCC)
ADVANCED 6 FEEDERS

Schneider Electric

Released for Manufacturing
Printed on 2014/03/19

EAV5829303

Projet - No commande Project - Order No.	Indice Rev	Folio Sheet
	00	15

A3 suite - 01/2008

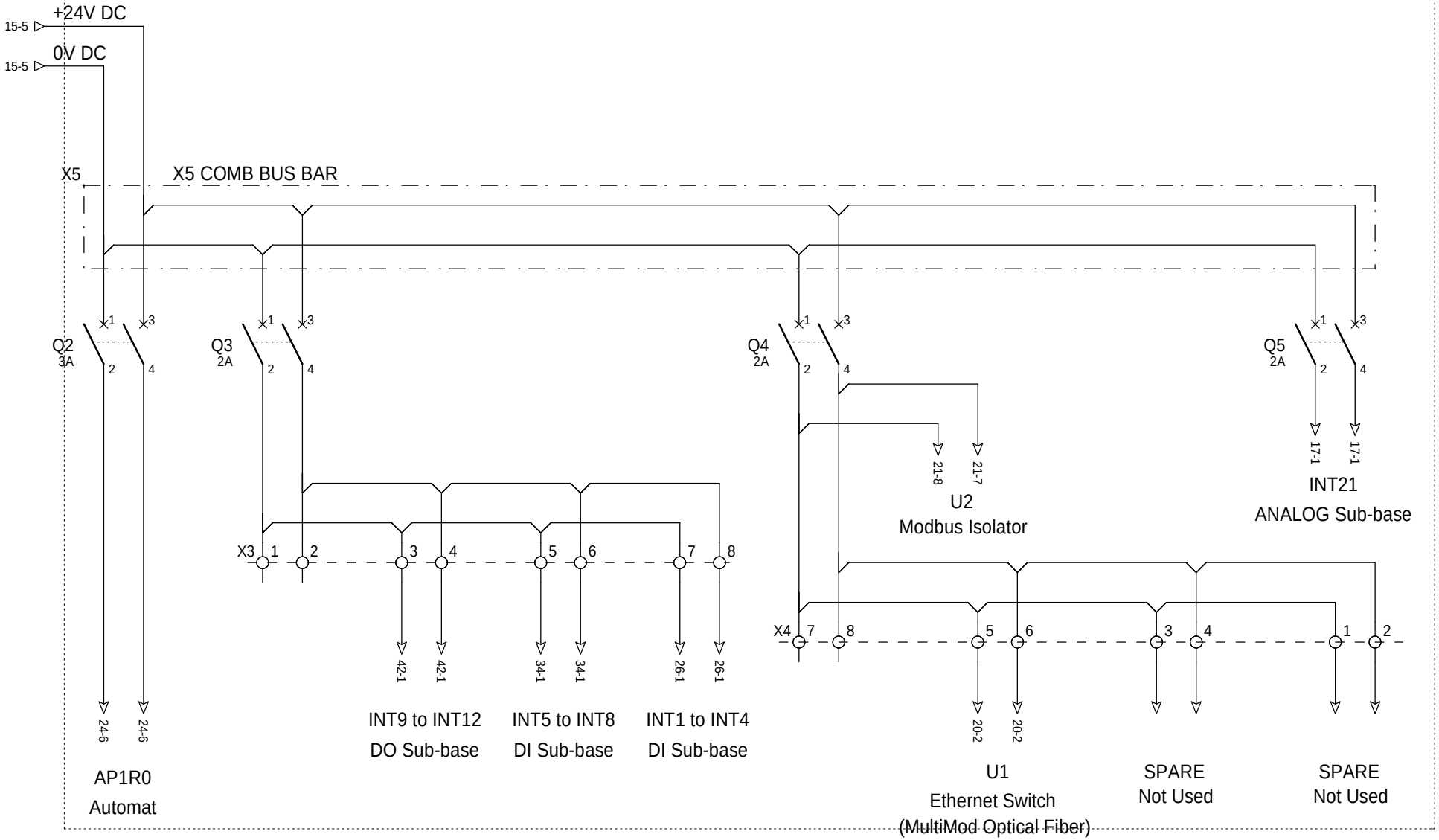

=
+MCC

The technical information contained in this document is the exclusive property of Schneider Electric Industries S.A.S and cannot be used or disclosed to third parties of any kind without its written consent. Only those drawings and diagrams marked "certified" are valid for execution. All drawings are in principle shown in the diagrams are in open position, drawn out with operating mechanism discharged and all power sources off.

Les informations techniques contenues dans ce document sont la propriete exclusive de Schneider Electric Industries S.A.S et ne peuvent etre utilisees ou divulguees a des tiers quels qu'ils soient sans son accord ecrit. Seuls nous engageant sur ce schéma sont en position ouvert - désarmés - débrochés - toutes sources coupées.

Ind. Rev	Date Date		Archiv. Micro-filmed	Ind. Rev	Date Date	Modification / Modification	Archiv. Micro-filmed
00	17/03/2014	Edition originale / First issue					

+24V DC POWER SUPPLY DISTRIBUTION
- ADVANCED 6 FEEDERS

GRID MONITORING CONTROL CAB.
(GRID MCC)
ADVANCED 6 FEEDERS

Schneider Electric

Released for Manufacturing
Printed on 2014/03/19

EAV5829303

Projet - No commande Project - Order No.	Indice Rev	Folio Sheet
	00	16

A3 suite - 01/2008

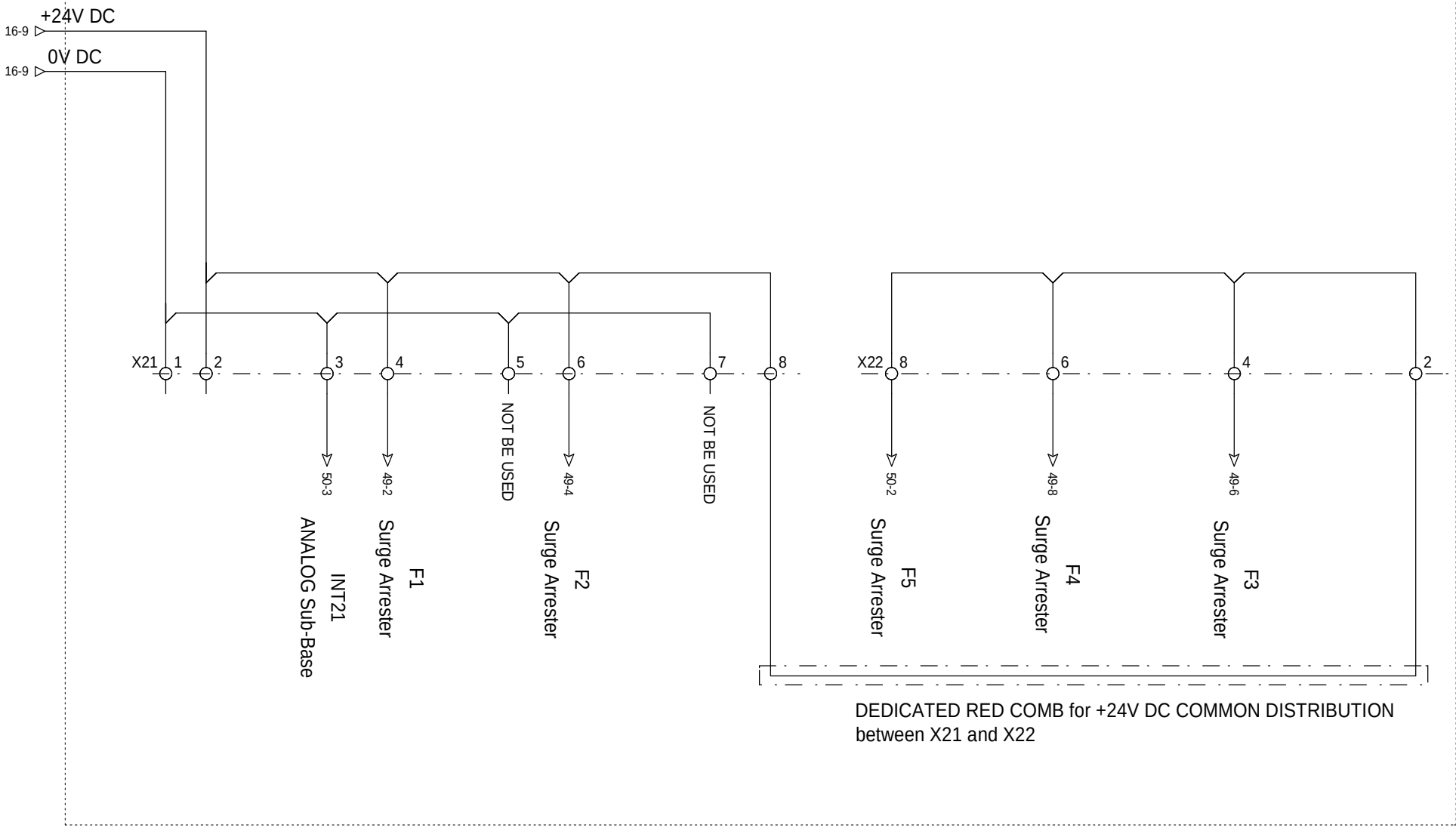

=
+MCC

The technical information contained in this document is the exclusive property of Schneider Electric Industries S.A.S and cannot be used or disclosed to third parties of any kind without its written consent. Only those drawings and diagrams marked "certified" or "approved" are to be used for execution. All devices shown in the diagrams are in open position, drawn out with operating mechanism discharged and all power sources off.

Les informations techniques contenues dans ce document sont la propriete exclusive de Schneider Electric Industries S.A.S et ne peuvent etre utilisees ou divulguees a des tiers quels qu'ils soient sans son accord ecrit. Seuls nous engageant pour ce document, les plans et schemas certifies ou approuves. Les appareils representes sur ce schéma sont en position ouvert - désarmés - débrochés - toutes sources coupées.

Ind. Rev	Date Date	Modification / Modification	Archiv. Micro-filmed	Ind. Rev	Date Date	Modification / Modification	Archiv. Micro-filmed
00	17/03/2014	Edition originale / First issue					

+24V DC POWER SUPPLY DISTRIBUTION
- WS Analog Inputs
- ADVANCED

GRID MONITORING CONTROL CAB.
(GRID MCC)
ADVANCED 6 FEEDERS

Schneider Electric

Released for Manufacturing
Printed on 2014/03/19

EAV5829303

Projet - No commande Project - Order No.	Indice Rev	Folio Sheet
	00	17

A3 suite - 01/2008

The technical information contained in this document is the exclusive property of Schneider Electric Industries S.A.S and cannot be used or disclosed to third parties of any kind without its written consent. Only those drawings and diagrams marked "certified" are to be used for execution. All drawings shown in this document are in open position, drawn out with operating mechanism discharged and all power sources off.

Les informations techniques contenues dans ce document sont la propriete exclusive de Schneider Electric Industries S.A.S et ne peuvent etre utilisees ou divulguees a des tiers quels qu'ils soient sans son accord ecrit. Seuls nous engageant sur ce schéma sont les plans et schémas marqués "certifié" lorsque ils sont exécutés. Les appareils représentés sur ce schéma sont en position ouvert - désarmés - débrochés - toutes sources coupées.

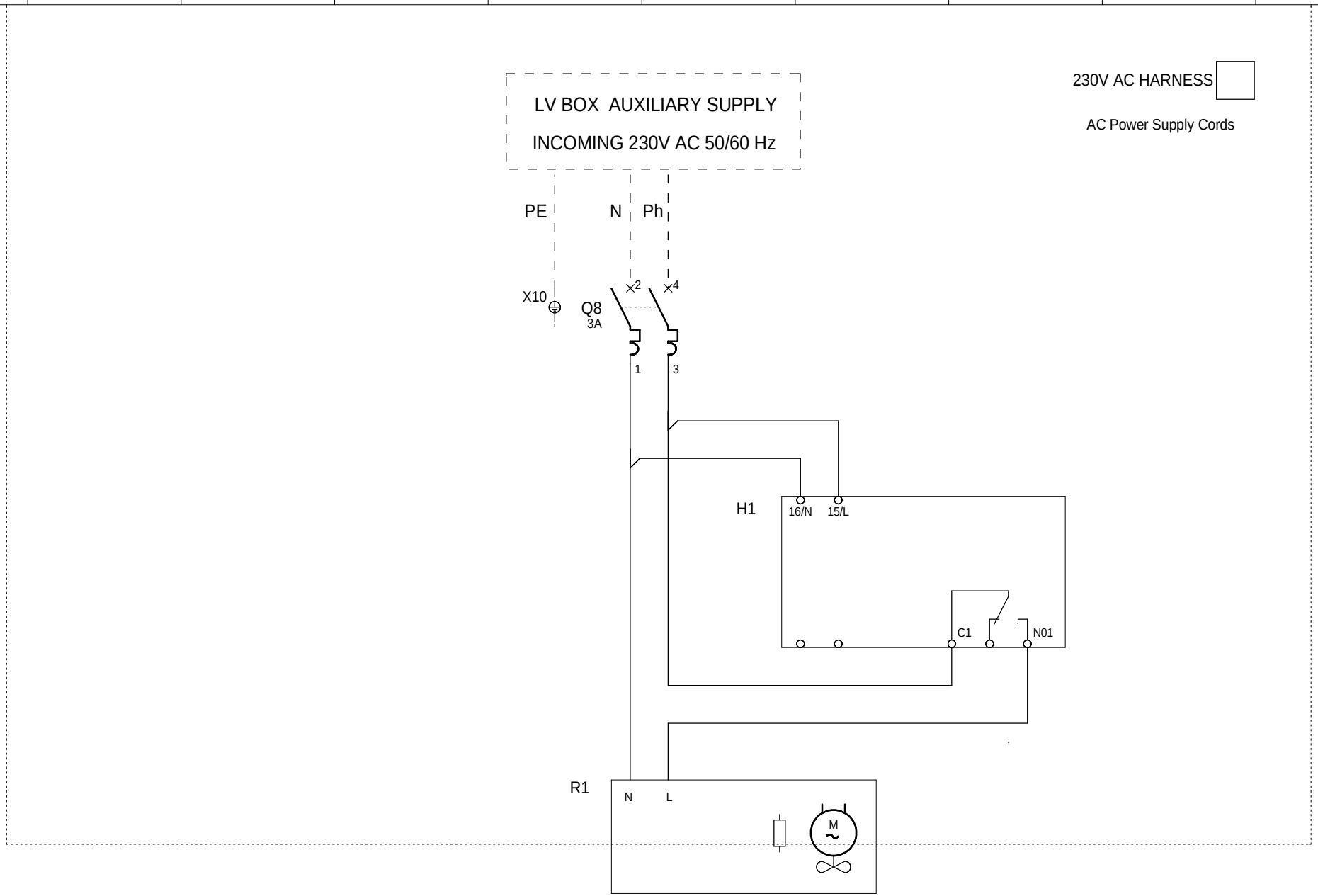

=
+MCC

Ind. Rev	Date Date	Modification / Modification	Archiv. Micro-filmed	Ind. Rev	Date Date	Modification / Modification	Archiv. Micro-filmed
00	17/03/2014	Edition originale / First issue					

230V AC POWER SUPPLY HEATER

GRID MONITORING CONTROL CAB.
(GRID MCC)
ADVANCED 6 FEEDERS

Schneider Electric

Released for Manufacturing
Printed on 2014/03/18

EAV5829303

Projet - No commande / Project - Order No.	Indice Rev	Folio Sheet
	00	18

A3 suite - 01/2008

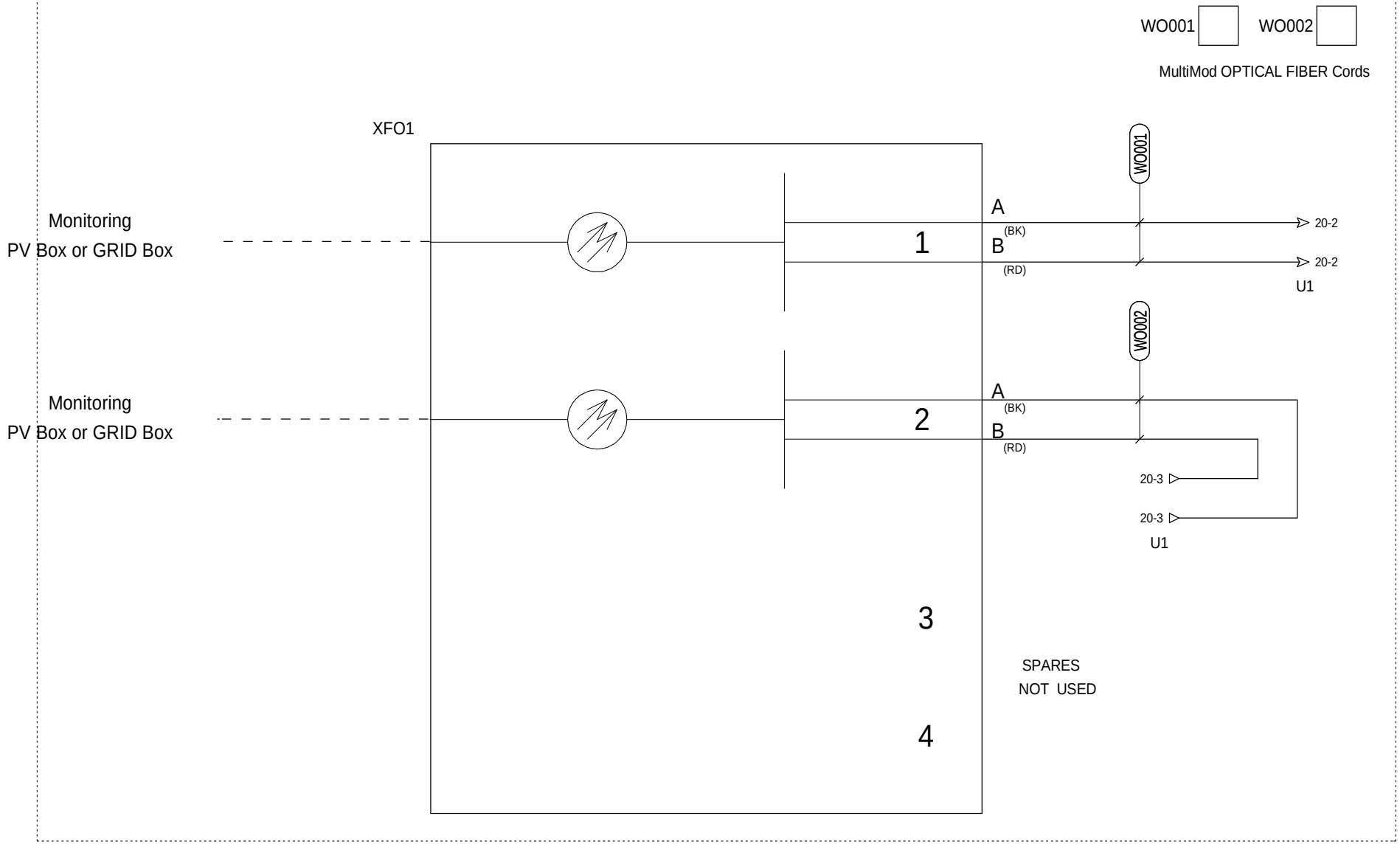

=
+MCC

The technical information contained in this document is the exclusive property of Schneider Electric Industries S.A.S and cannot be used or disclosed to third parties of any kind without its written consent. Only those drawings and diagrams marked "for manufacturing" are to be used for execution. All other drawings and diagrams are in open position, drawn out with operating mechanism discharged and all power sources off.

Les informations techniques contenues dans ce document sont la propriete exclusive de Schneider Electric Industries S.A.S et ne peuvent etre utilisees ou divulguees a des tiers quels qu'ils soient sans son accord ecrit. Seuls nous engageant sur ce schéma sont en position ouvert - désarmés - débrochés - toutes sources coupées.

Ind. Rev	Date Date	Modification / Modification	Archiv. Micro-filmed	Ind. Rev	Date Date	Modification / Modification	Archiv. Micro-filmed
00	17/03/2014	Edition originale / First issue					

MultiMod OPTICAL BOX
- ADVANCED

GRID MONITORING CONTROL CAB.
(GRID MCC)
ADVANCED 6 FEEDERS

Schneider Electric

Released for Manufacturing
Printed on 2014/03/19

EAV5829303

Projet - No commande Project - Order No.	Indice Rev	Folio Sheet
	00	19

A3 suite - 01/2008

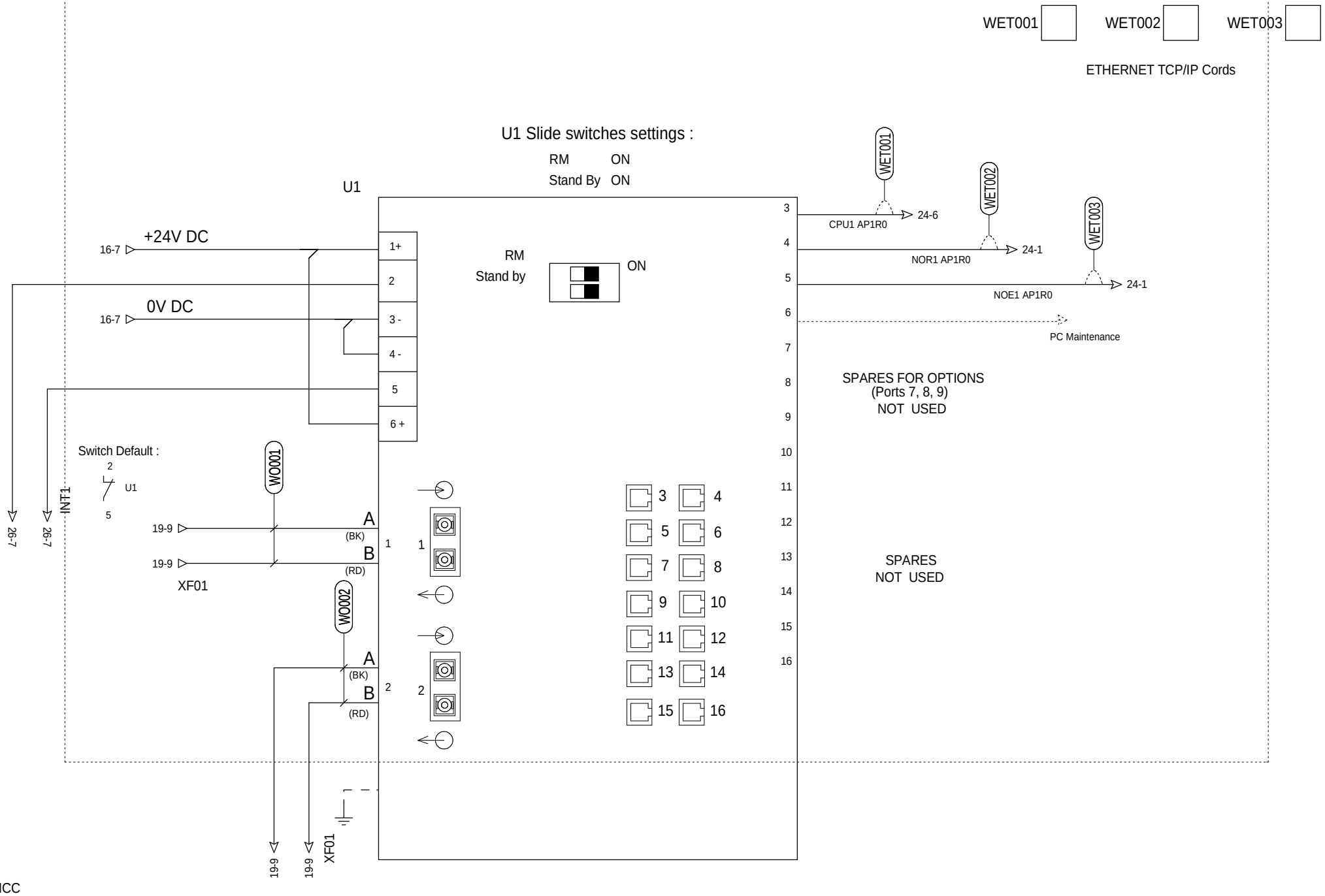

The technical information contained in this document is the exclusive property of Schneider Electric Industries S.A.S and cannot be used or disclosed to third parties of any kind without its written consent. Only those drawings and diagrams marked "approved for construction" are to be used for execution. All power sources in the diagrams are in open position, drawn out with operating mechanism discharged and all power sources off.

Les informations techniques contenues dans ce document sont la propriete exclusive de Schneider Electric Industries S.A.S et ne peuvent etre utilisees ou divulguees a des tiers quels qu'ils soient sans son accord ecrit. Seuls nous engagent ceux marques "a construire". Les appareils representes sur ce schéma sont en position ouvert - désarmés - débrochés - toutes sources coupées.

Ind. Rev	Date Date	Modification / Modification	Archiv. Micro-filmed	Ind. Rev	Date Date	Modification / Modification	Archiv. Micro-filmed
00	17/03/2014	Edition originale / First issue					

MultiMod ETHERNET TCP/IP SWITCH - ADVANCED

GRID MONITORING CONTROL CAB. (GRID MCC) ADVANCED 6 FEEDERS

Schneider Electric

Released for Manufacturing
Printed on 2014/03/19

EAV5829303

Projet - No commande Project - Order No.	Indice Rev	Folio Sheet
	00	20

A3 suite - 01/2008

The technical information contained in this document is the exclusive property of Schneider Electric Industries S.A.S and cannot be used or disclosed to third parties of any kind without its written consent. Only those drawings and diagrams marked "certified" are to be used for execution and all those shown in this document are in open position, drawn out with operating mechanism discharged and all power sources off.

Les informations techniques contenues dans ce document sont la propriete exclusive de Schneider Electric Industries S.A.S et ne peuvent etre utilisees ou divulguees a des tiers quels qu'ils soient sans son accord ecrit. Seuls nous engagent ceux marqués "certifiés". Les schémas et dessins non certifiés sont donnés sur ce schéma sont en position ouvert - désarmés - débrochés - toutes sources coupées.

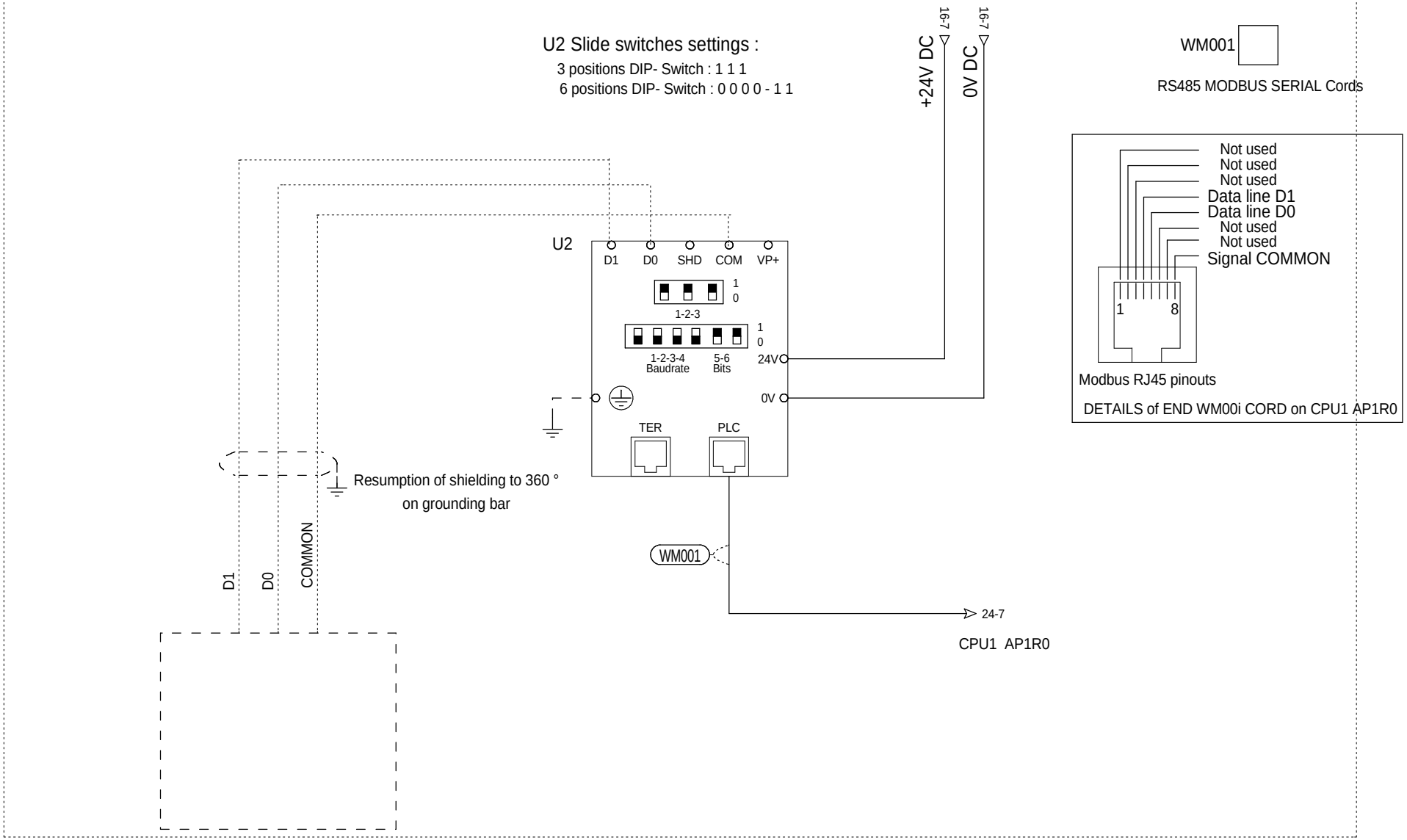

=
+MCC

Ind. Rev	Date Date	Modification / Modification	Archiv. Micro-filmed	Ind. Rev	Date Date	Modification / Modification	Archiv. Micro-filmed
00	17/03/2014	Edition originale / First issue					

ADVANCED LINE 1 MODBUS
CONNECTION TO AP1R0 M340 AUTOMAT
- 6 FEEDERS

GRID MONITORING CONTROL CAB.
(GRID MCC)
ADVANCED 6 FEEDERS

Schneider Electric

Released for Manufacturing
Printed on 2014/03/19

EAV5829303

Projet - No commande Project - Order No.	Indice Rev	Folio Sheet
	00	21

A3 suite - 01/2008

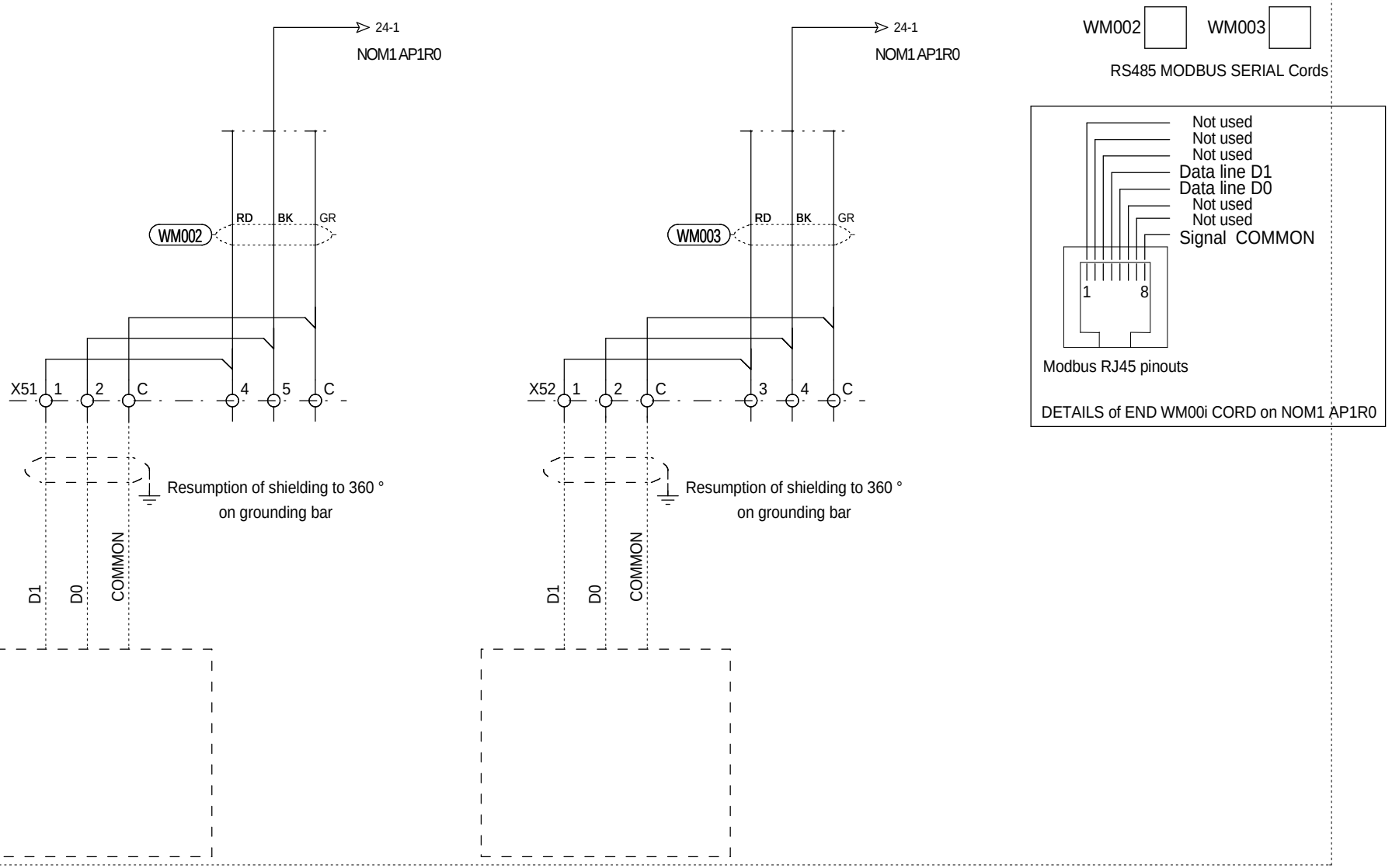

RS485 MODBUS SERIAL LINE 2
recommended DAISY CHAIN :
2xEM DEL + 2 Prot. Relay (2 Feeders)

RS485 MODBUS SERIAL LINE 3
recommended DAISY CHAIN :
2xEM DEL + 2 Prot. Relay (2 Feeders)

=
+MCC

Ind. Rev	Date Date	Modification / Modification	Archiv. Micro-filmed	Ind. Rev	Date Date	Modification / Modification	Archiv. Micro-filmed
00	17/03/2014	Edition originale / First issue					

ADVANCED LINE 2 AND 3 MODBUS CONNECTION TO AP1R0 M340 AUTOMAT - 6 FEEDERS

GRID MONITORING CONTROL CAB.
(GRID MCC)
ADVANCED 6 FEEDERS

Schneider Electric

Released for Manufacturing
Printed on 2014/03/19

EAV5829303

Projet - No commande / Project - Order No.	Indice Rev	Folio Sheet
	00	22

A3 suite - 01/2008

The technical information contained in this document is the exclusive property of Schneider Electric Industries S.A.S and cannot be used or disclosed to third parties of any kind without its written consent. Only those drawings and diagrams marked "released for manufacturing" are to be used for execution. All drawings shown in this document are in open position, drawn out with operating mechanism discharged and all power sources off.

Les informations techniques contenues dans ce document sont la propriete exclusive de Schneider Electric Industries S.A.S et ne peuvent etre utilisees ou divulguees a des tiers quels qu'ils soient sans son accord ecrit. Seuls nous engagent ou ne peuvent etre utilisees que les plans et schemas marques "bon a construire". Les appareils representes sur ce schéma sont en position ouvert - désarmés - débrochés - toutes sources coupées.

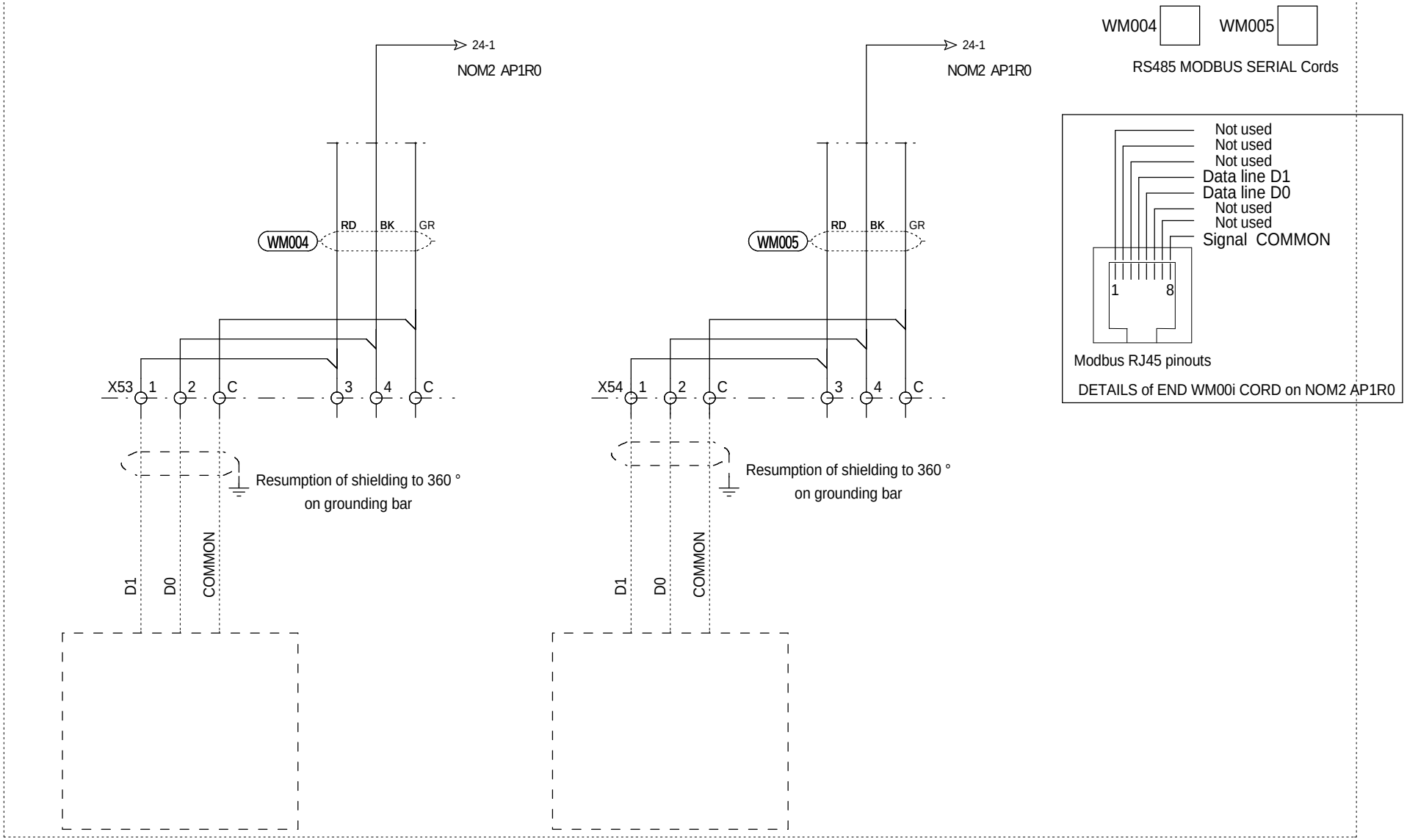

RS485 MODBUS SERIAL LINE 4
recommended DAISY CHAIN :
2xEM DEL + 2 Prot. Relay (2 Feeders)

RS485 MODBUS SERIAL LINE 5
recommended DAISY CHAIN :
2xEM DEL (MV Metering) + 1 Prot. Relay (Coupling)

The technical information contained in this document is the exclusive property of Schneider Electric Industries S.A.S and cannot be used or disclosed to third parties of any kind without its written consent. Only those drawings and diagrams marked "certified" are to be used for execution. All drawings are shown in the diagrams are in open position, drawn out with operating mechanism discharged and all power sources off.

Les informations techniques contenues dans ce document sont la propriete exclusive de Schneider Electric Industries S.A.S et ne peuvent etre utilisees ou divulguees a des tiers quels qu'ils soient sans son accord ecrit. Seuls nous engageant sur ce schéma sont en position ouvert - désarmés - débrochés - toutes sources coupées.

=
+MCC

Rev.	Date	Modification	Archiv. Micro-filmed	Rev.	Date	Modification	Archiv. Micro-filmed
00	17/03/2014	Edition originale					

ADVANCED LINE 4 AND 5 MODBUS CONNECTION TO AP1R0 M340 AUTOMAT - 6 FEEDERS

GRID MONITORING CONTROL CAB. (GRID MCC) ADVANCED 6 FEEDERS

Schneider Electric

Released for Manufacturing
Printed on 2014/03/18

EAV5829303

Projet - Nom du Projet | Ordre de Commande | Indice Rev. 00 | Feuille Sheet 23

A3 E=mc² 05/2008

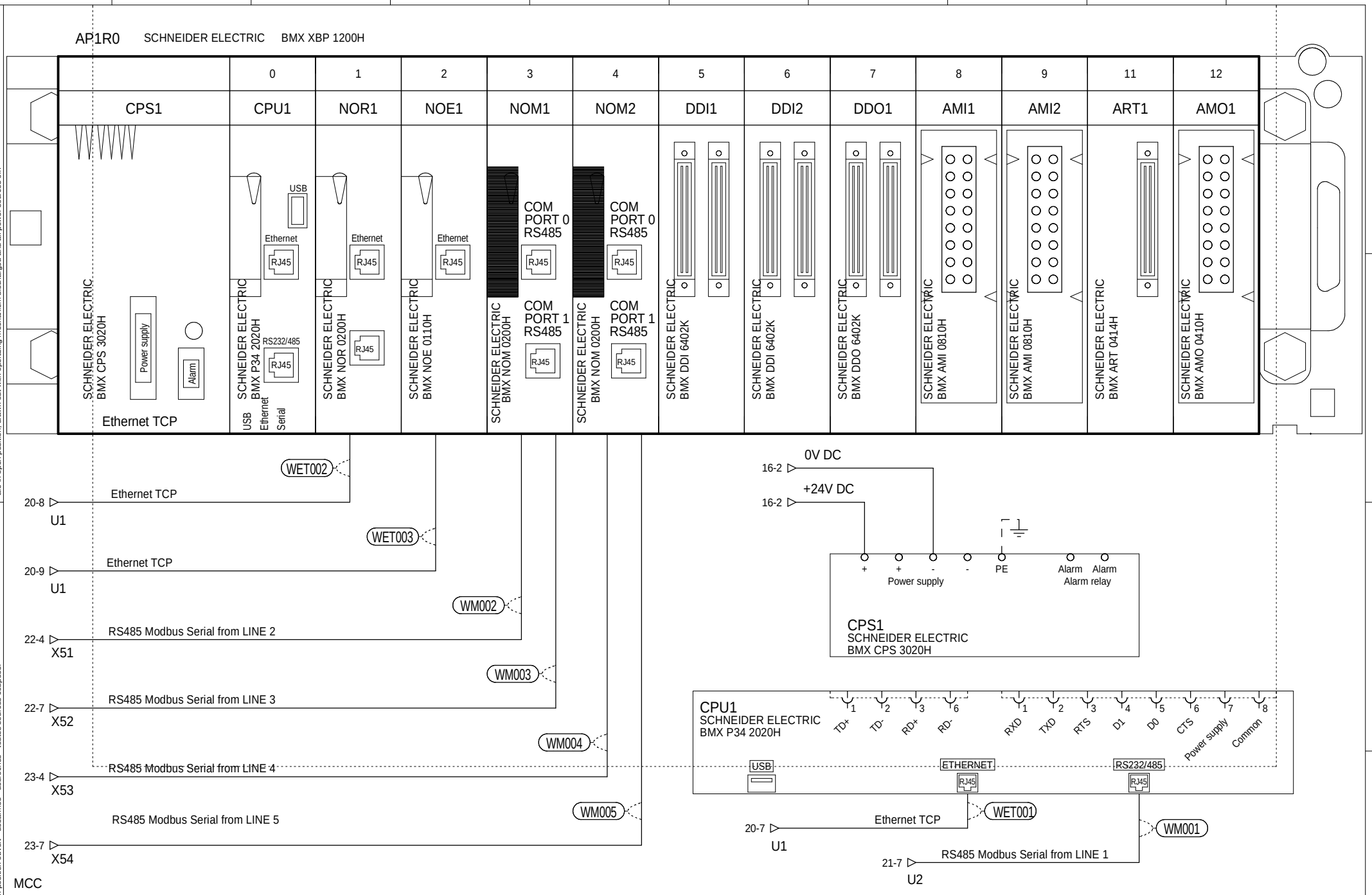

The technical information contained in this document is the exclusive property of Schneider Electric Industries S.A.S and cannot be used or disclosed to third parties of any kind without its written consent. Only those drawings and diagrams marked "released for manufacturing" are authorized for execution. All drawings shown in this document are in open position, drawn out with operating mechanism discharged and all power sources off.

Les informations techniques contenues dans ce document sont la propriete exclusive de Schneider Electric Industries S.A.S et ne peuvent etre utilisees ou divulguees a des tiers quels qu'ils soient sans son accord ecrit. Seuls nous engageant sur ce schéma sont en position ouvert - désarmés - débrochés - toutes sources coupées.

Ind. Rev	Date Date		Archiv. Micro-filmed	Ind. Rev	Date Date	Modification / Modification	Archiv. Micro-filmed
00	17/03/2014	Edition originale / First issue					

ADVANCED AP1R0 M340 AUTOMAT - 6 FEEDERS

GRID MONITORING CONTROL CAB. (GRID MCC) ADVANCED 6 FEEDERS

Schneider Electric

Released for Manufacturing
Printed on 2014/03/19

EAV5829303

Projet - No commande / Project - Order No.	Indice Rev	Folio Sheet
	00	24

A3 suite - 11/2006

The technical information contained in this document is the exclusive property of Schneider Electric Industries S.A.S and cannot be used or disclosed to third parties of any kind without its written consent. Only those drawings and diagrams marked "for execution" are to be used for the purpose of execution. All devices shown in the diagrams are in open position, drawn out with operating mechanism discharged and all power sources off.

Les informations techniques contenues dans ce document sont la propriete exclusive de Schneider Electric Industries S.A.S et ne peuvent etre utilisees ou divulguees a des tiers quels qu'ils soient sans son accord ecrit. Seuls nous engageant sur ce schéma sont en position ouvert - désarmés - débrochés - toutes sources coupées.

LV box CB NP Aux. Synthesis Closed	LV box CB Priority Aux. Synthesis Closed	LV box Video CB Closed	Monitoring cabinet UPS - Fault Synthesis	Monitoring cabinet UPS - On battery	Monitoring cabinet UPS - Low battery	Monitoring cabinet UPS - By-Passed	Grid Box Emergency stop

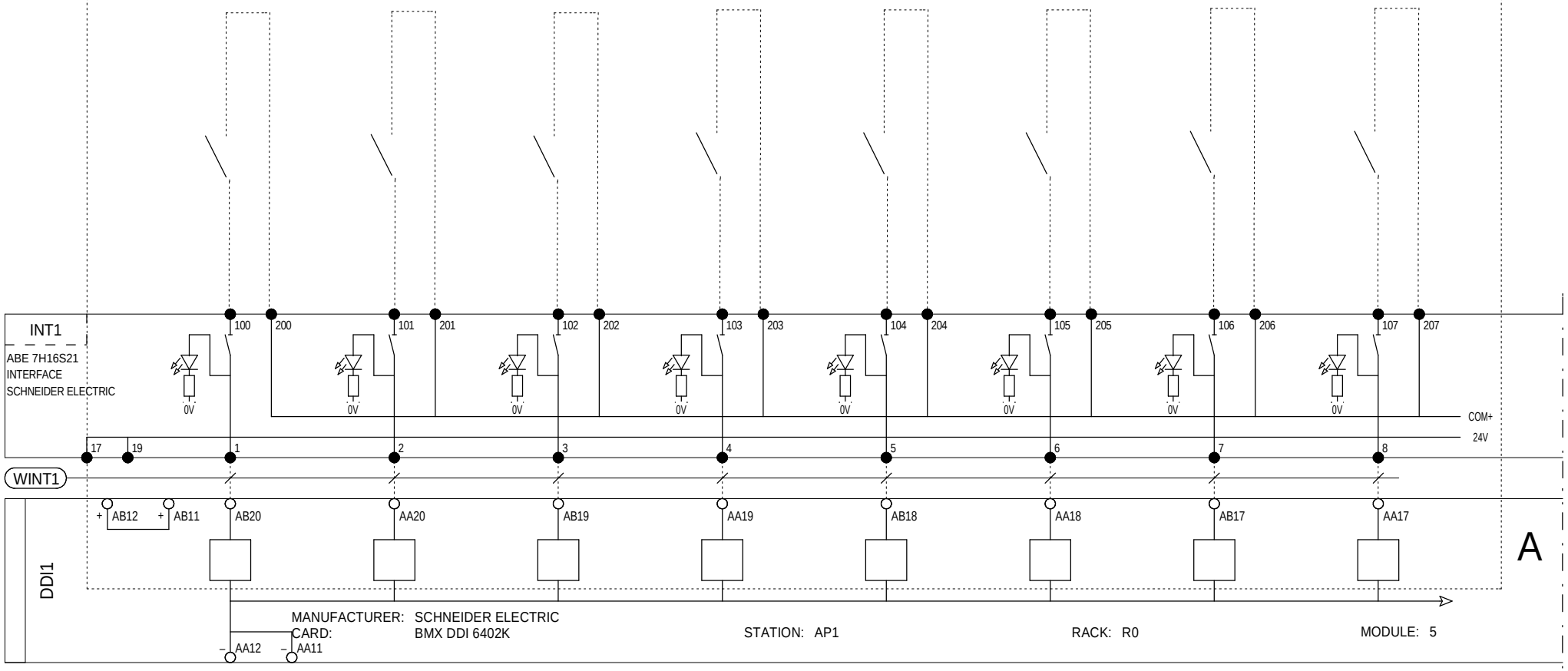

=
+MCC

Ind. Rev	Date Date	Modification / Modification	Archiv. Micro-filmed	Ind. Rev	Date Date	Modification / Modification	Archiv. Micro-filmed
00	17/03/2014	Edition originale / First issue					

ADVANCED Digitals Inputs
- 6 FEEDERS

GRID MONITORING CONTROL CAB.
(GRID MCC)
ADVANCED 6 FEEDERS

Schneider Electric

Released for Manufacturing
Printed on 2014/03/19

EAV5829303

Projet - No commande Project - Order No.	Indice Rev	Folio Sheet
	00	25

A3 suite - 01/2008

The technical information contained in this document is the exclusive property of Schneider Electric Industries S.A.S and cannot be used or disclosed to third parties of any kind without its written consent. Only those drawings and diagrams specifically referred to in a contract or purchase order are binding for execution. All devices shown in the diagrams are in open position, drawn out with operating mechanism discharged and all power sources off.

Les informations techniques contenues dans ce document sont la propriete exclusive de Schneider Electric Industries S.A.S et ne peuvent etre utilisees ou divulguees a des tiers quels qu'ils soient sans son accord ecrit. Seuls nous engagent ou vous engagent les plans et schemas annexes a votre commande. Les appareils representes sur ce schéma sont en position ouvert - désarmés - débrochés - toutes sources coupées.

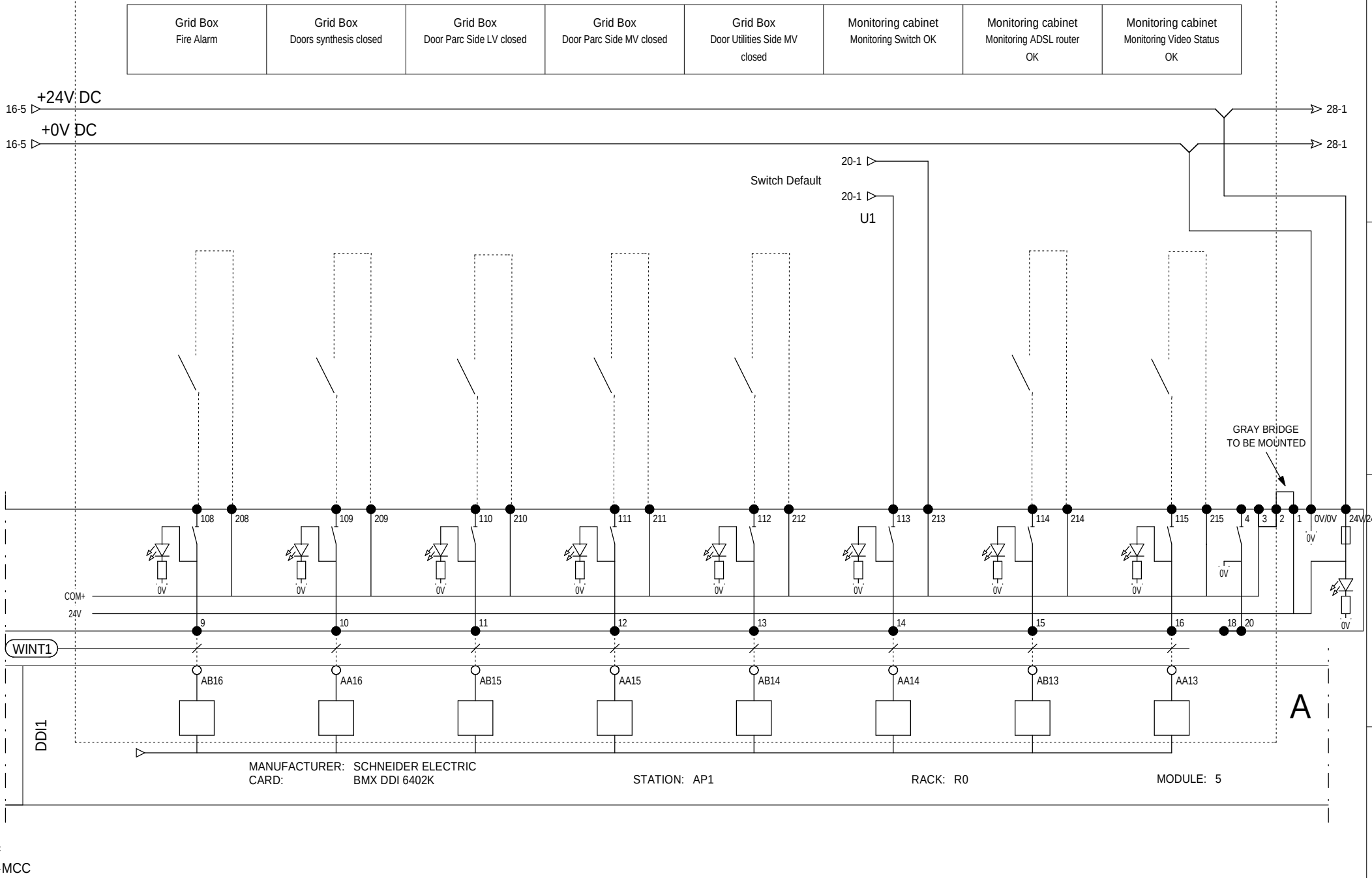

Ind. Rev	Date Date		Archiv. Micro-filmed	Ind. Rev	Date Date	Modification / Modification	Archiv. Micro-filmed
00	17/03/2014	Edition originale / First issue					

ADVANCED Digitals Inputs
- 6 FEEDERS

GRID MONITORING CONTROL CAB.
(GRID MCC)
ADVANCED 6 FEEDERS

Schneider Electric

Released for Manufacturing
Printed on 2014/03/19

EAV5829303

Projet - No commande / Project - Order No.	Indice Rev	Folio Sheet
	00	26

A3 suite - 01/2008

Grid Box	Grid Box	Incomer	Incomer	Incomer	Incomer	Feeder Aux	Feeder Aux
MV cell - Synthesis NP Aux. Synthesis Closed	MV cell - Synthesis Priority Aux. Synthesis Closed	Local or Remote Mode (1 = Local)	CB or Switch Close	Line Disconnector Close	protection relay Watch Dog OK	Local or Remote Mode (1 = Local)	CB or Switch Close

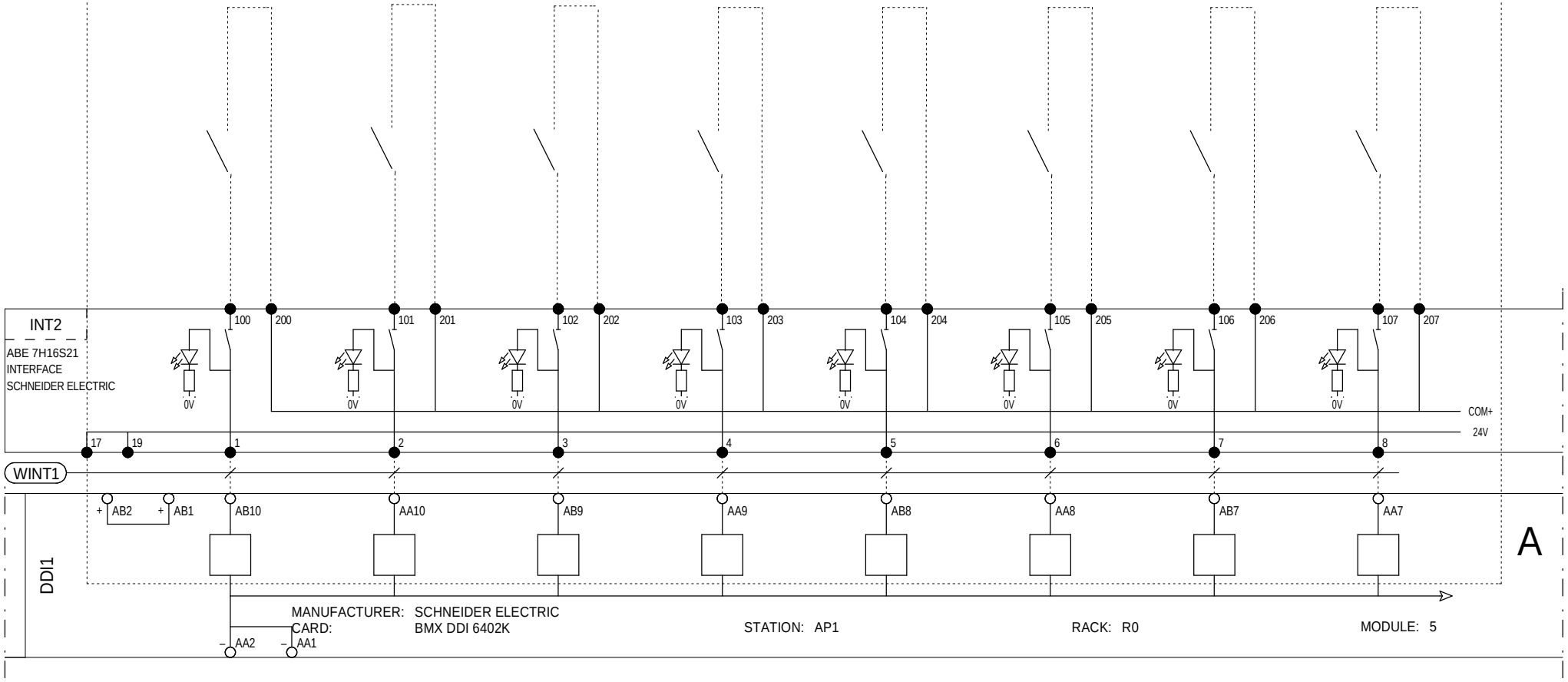

=
+MCC

Ind. Rev	Date Date		Archiv. Micro-filmed	Ind. Rev	Date Date	Modification / Modification	Archiv. Micro-filmed
00	17/03/2014	Edition originale / First issue					

ADVANCED Digitals Inputs
- 6 FEEDERS

GRID MONITORING CONTROL CAB.
(GRID MCC)
ADVANCED 6 FEEDERS

Schneider Electric

Released for Manufacturing
Printed on 2014/03/19

EAV5829303

Projet - No commande Project - Order No.	Indice Rev	Folio Sheet
	00	27

A3 suite - 01/2008

The technical information contained in this document is the exclusive property of Schneider Electric Industries S.A.S and cannot be used or disclosed to third parties of any kind without its written consent. Only those drawings and diagrams marked "for approval" or "for execution" are binding for execution. All devices shown in the diagrams are in open position, drawn out with operating mechanism discharged and all power sources off.

Les informations techniques contenues dans ce document sont la propriete exclusive de Schneider Electric Industries S.A.S et ne peuvent etre utilisees ou divulguees a des tiers quels qu'ils soient sans son accord ecrit. Seuls nous engageant sont les dessins mentionnes "a fins d'execution" et "a fins d'approbation". Les appareils representes sur ce schéma sont en position ouvert - désarmés - débrochés - toutes sources coupées.

The technical information contained in this document is the exclusive property of Schneider Electric Industries S.A.S and cannot be used or disclosed to third parties of any kind without its written consent. Only those drawings and diagrams certified for execution by an authorized person can be used for the purpose of execution. All devices shown in the diagrams are in open position, drawn out with operating mechanism discharged and all power sources off.

Les informations techniques contenues dans ce document sont la propriete exclusive de Schneider Electric Industries S.A.S et ne peuvent etre utilisees ou divulguees a des tiers quels qu'ils soient sans son accord ecrit. Seuls nous engageant sur ce schéma sont en position ouvert - désarmés - débrochés - toutes sources coupées.

Feeder Aux Fuse OK	MV /LV Tranformer DMCR protection relay alarm	MV / LV Tranformer DMCR tripping	Weather sensors Rain gauge pulse	Grid Box - EM Pulse 1 Active Energy produced pulse	Grid Box - EM Pulse 1 Reactive Energy produced pulse	Grid Box - EM Pulse 1 Active Energy consumed pulse	Grid Box - EM Pulse 1 Reactive Energy consumed pulse

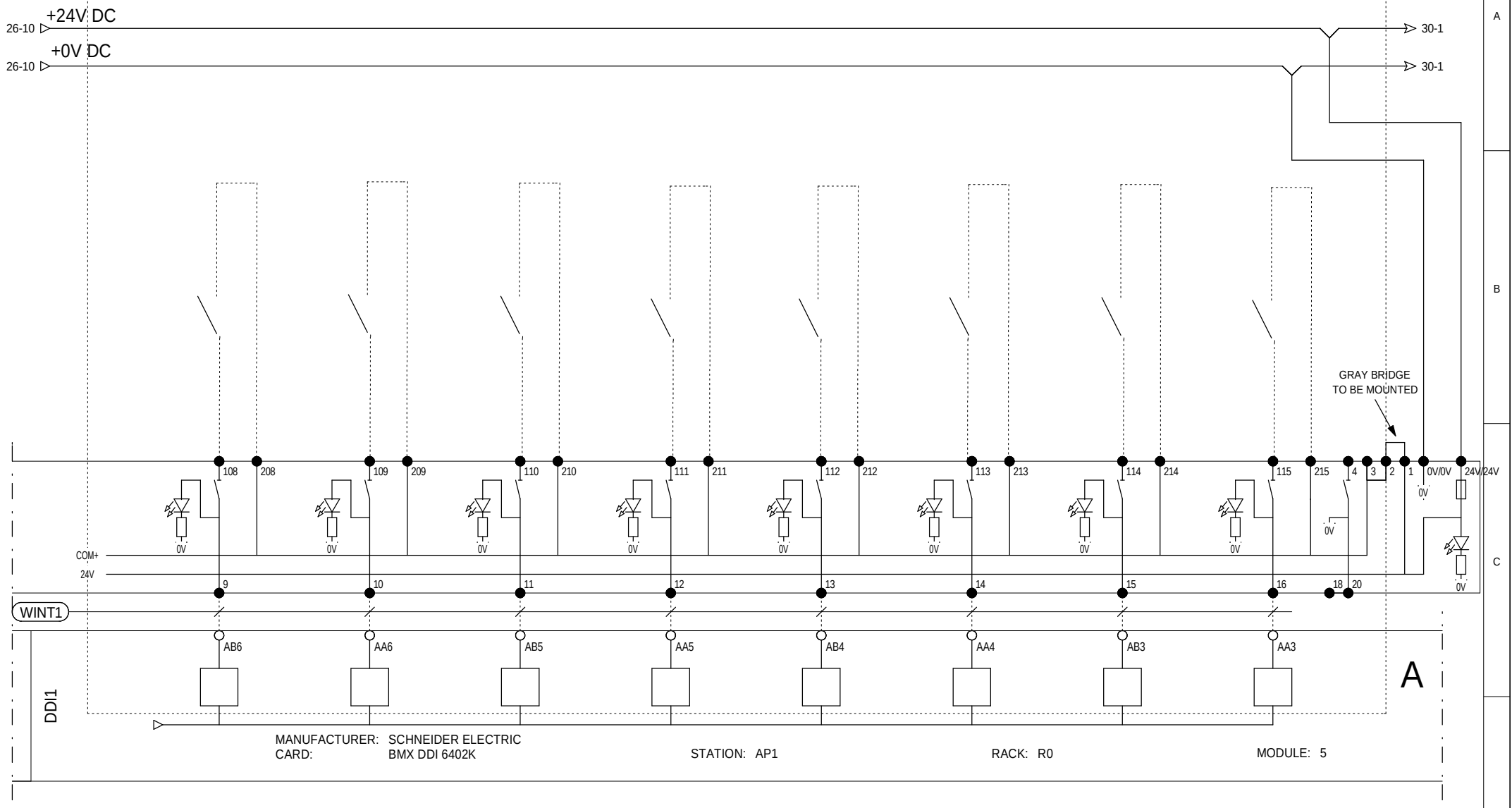

Ind. Rev	Date Date		Archiv. Micro-filmed	Ind. Rev	Date Date	Modification / Modification	Archiv. Micro-filmed
00	17/03/2014	Edition originale / First issue					

ADVANCED Digitals Inputs
- 6 FEEDERS

GRID MONITORING CONTROL CAB.
(GRID MCC)
ADVANCED 6 FEEDERS

Schneider Electric

Released for Manufacturing
Printed on 2014/03/19

EAV5829303

Projet - No commande Project - Order No.	Indice Rev	Folio Sheet
	00	28

A3 suite - 01/2008

The technical information contained in this document is the exclusive property of Schneider Electric Industries S.A.S and cannot be used or disclosed to third parties of any kind without its written consent. Only those drawings and diagrams marked "for approval" or "for execution" are binding for execution. All devices shown in the diagrams are in open position, drawn out with operating mechanism discharged and all power sources off.

Les informations techniques contenues dans ce document sont la propriete exclusive de Schneider Electric Industries S.A.S et ne peuvent etre utilisees ou divulguees a des tiers quels qu'ils soient sans son accord ecrit. Seuls nous engageant sur ce schéma sont en position ouvert - désarmés - débrochés - toutes sources coupées.

Incomer Local or Remote Mode (1 = Local)	Incomer CB or Switch Close	Incomer Line Disconnector Close	Incomer protection relay Watch Dog OK	Coupling Cell Local or Remote Mode (1 = Local)	Coupling Cell CB or Switch Close	Coupling Cell Line Disconnector Close	Coupling Cell protection relay Watch Dog OK

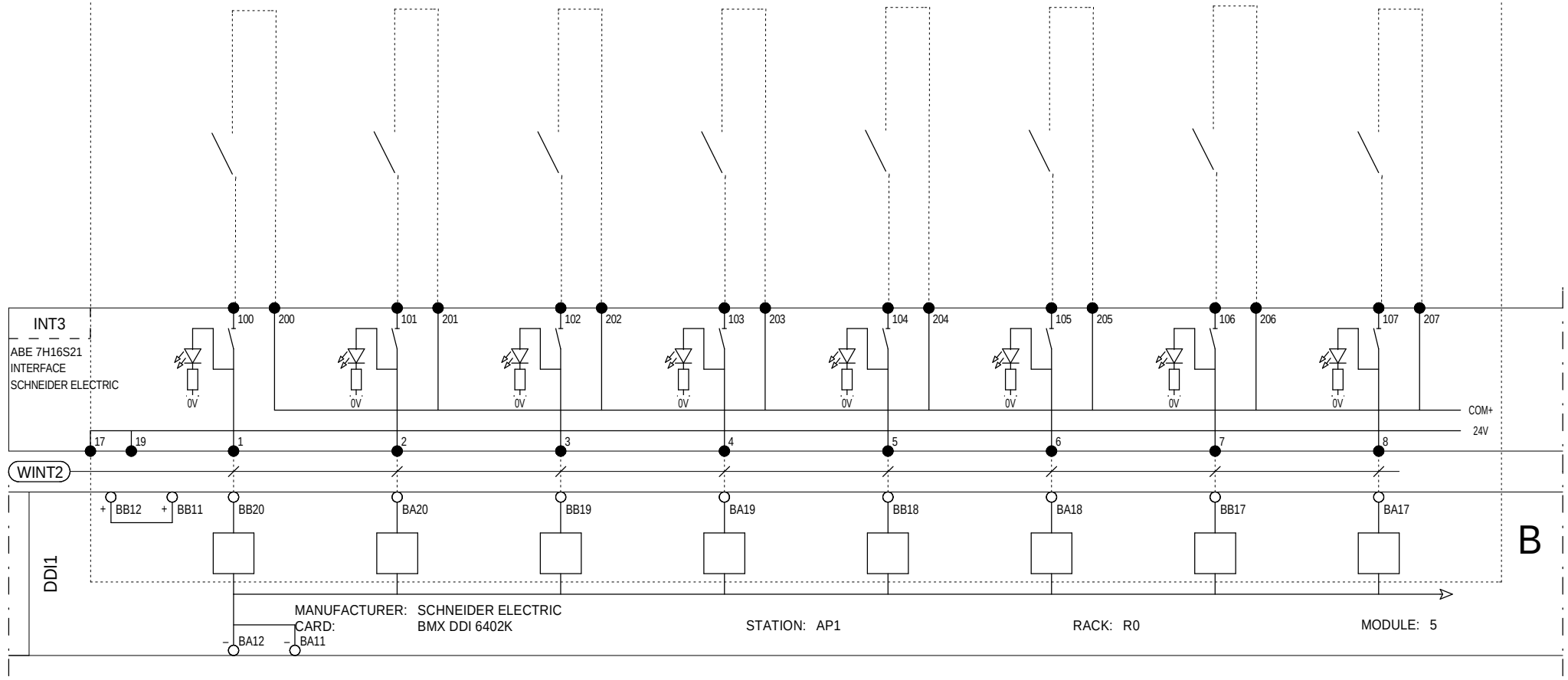

=
+MCC

Ind. Rev	Date Date	Modification / Modification	Archiv. Micro-filmed	Ind. Rev	Date Date	Modification / Modification	Archiv. Micro-filmed
00	17/03/2014	Edition originale / First issue					

ADVANCED Digitals Inputs
- 6 FEEDERS

GRID MONITORING CONTROL CAB.
(GRID MCC)
ADVANCED 6 FEEDERS

Schneider Electric

Released for Manufacturing
Printed on 2014/03/19

EAV5829303

Projet - No commande / Project - Order No.	Indice Rev	Folio Sheet
	00	29

A3 suite - 01/2008

The technical information contained in this document is the exclusive property of Schneider Electric Industries S.A.S and cannot be used or disclosed to third parties of any kind without its written consent. Only those drawings and diagrams marked "for execution" are to be used for execution and installation purposes. All drawings shown in this document are in open position, drawn out with operating mechanism discharged and all power sources off.

Les informations techniques contenues dans ce document sont la propriete exclusive de Schneider Electric Industries S.A.S et ne peuvent etre utilisees ou divulguees a des tiers quels qu'ils soient sans son accord ecrit. Seuls nous engageant pour ce document, les plans et schemas "a mettre en execution" et "pour execution". Les appareils representes sur ce schéma sont en position ouvert - désarmés - débrochés - toutes sources coupées.

Coupling Cell 48V DC charger - Fault Synthesis	Coupling Cell 48V DC charger - On battery	Coupling Cell 48V DC charger - Low battery	Feeder 1 Local or Remote Mode (1 = Local)	Feeder 1 CB or Switch Close	Feeder 1 Line Disconnector Close	Feeder 1 protection relay Watch Dog OK	Feeder 1 Fuse OK

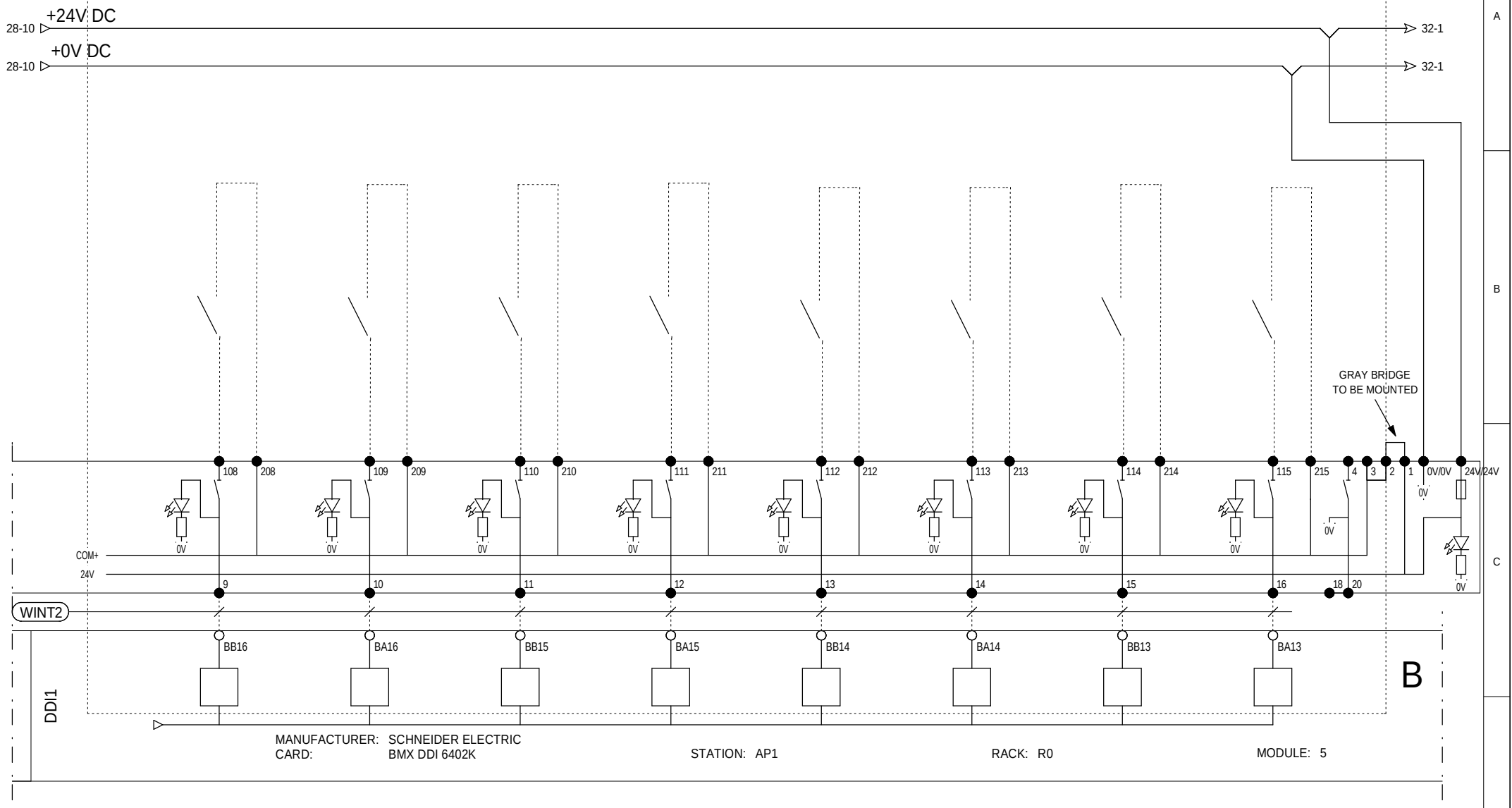

Ind. Rev	Date Date	Modification / Modification	Archiv. Micro-filmed	Ind. Rev	Date Date	Modification / Modification	Archiv. Micro-filmed
00	17/03/2014	Edition originale / First issue					

ADVANCED Digitals Inputs
- 6 FEEDERS

GRID MONITORING CONTROL CAB.
(GRID MCC)
ADVANCED 6 FEEDERS

Schneider Electric

Released for Manufacturing
Printed on 2014/03/19

EAV5829303

Projet - No commande Project - Order No.	Indice Rev	Folio Sheet
	00	30

A3 suite - 01/2008

The technical information contained in this document is the exclusive property of Schneider Electric Industries S.A.S and cannot be used or disclosed to third parties of any kind without its written consent. Only those drawings and diagrams specifically referred to in a contract or purchase order are binding for execution. All devices shown in the diagrams are in open position, drawn out with operating mechanism discharged and all power sources off.

Les informations techniques contenues dans ce document sont la propriete exclusive de Schneider Electric Industries S.A.S et ne peuvent etre utilisees ou divulguees a des tiers quels qu'ils soient sans son accord ecrit. Seuls nous engageant les dessins et plans d'ensemble specifiques a une commande. Les appareils representes sur ce schéma sont en position ouvert - désarmés - débrochés - toutes sources coupées.

Feeder 1 Earth Fault	Feeder 1 - Option FLAIR MV Fault on HTA Wiring	Feeder 2 Local or Remote Mode (1 = Local)	Feeder 2 CB or Switch Close	Feeder 2 Line Disconnector Close	Feeder 2 protection relay Watch Dog OK	Feeder 2 Fuse OK	Feeder 2 Earth Fault

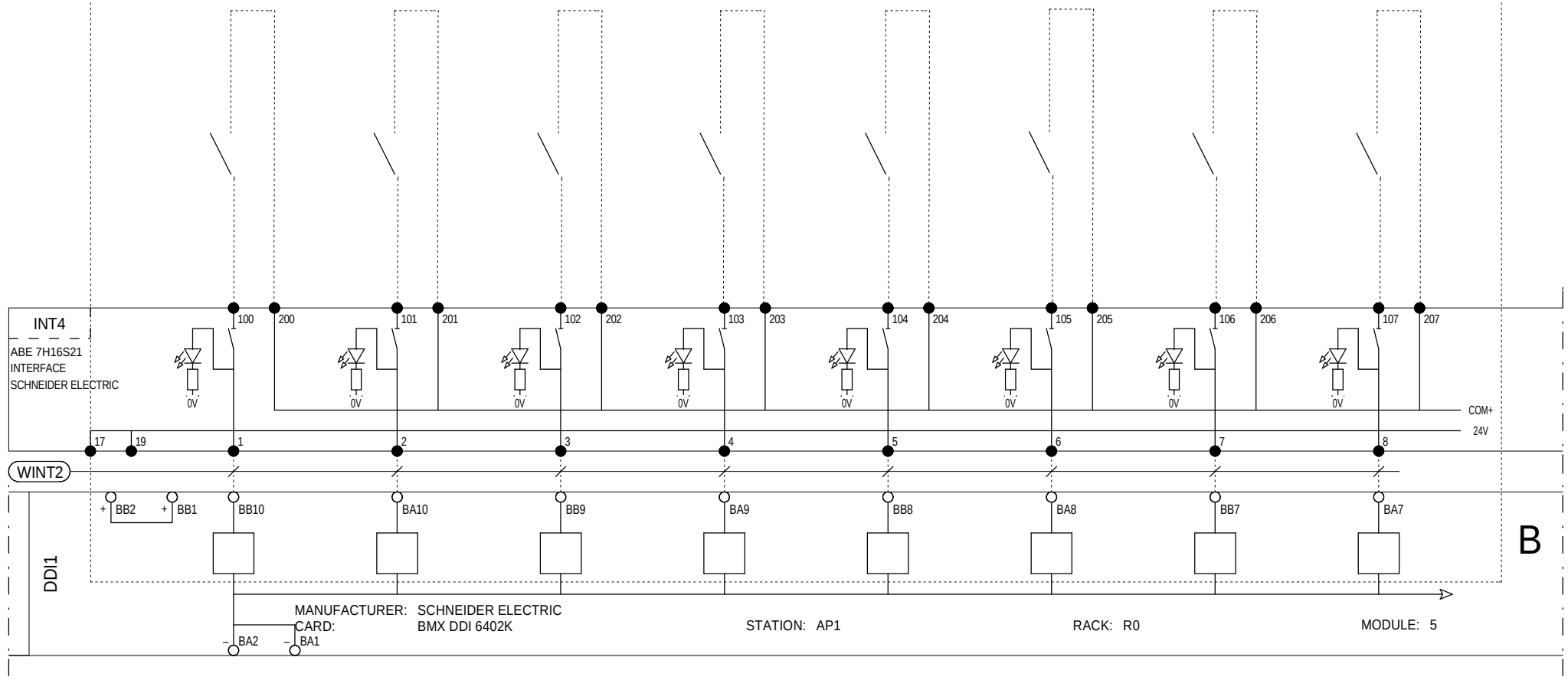

=
+MCC

Ind. Rev	Date Date	Modification / Modification	Archiv. Micro-filmed	Ind. Rev	Date Date	Modification / Modification	Archiv. Micro-filmed
00	17/03/2014	Edition originale / First issue					

ADVANCED Digitals Inputs
- 6 FEEDERS

GRID MONITORING CONTROL CAB.
(GRID MCC)
ADVANCED 6 FEEDERS

Schneider Electric

Released for Manufacturing
Printed on 2014/03/19

EAV5829303

Projet - No commande Project - Order No.	Indice Rev	Folio Sheet
	00	31

A3 suite - 01/2008

The technical information contained in this document is the exclusive property of Schneider Electric Industries S.A.S and cannot be used or disclosed to third parties of any kind without its written consent. Only those drawings and diagrams specifically offered for order have an authority for execution. All devices shown in the diagrams are in open position, drawn out with operating mechanism discharged and all power sources off.

Les informations techniques contenues dans ce document sont la propriete exclusive de Schneider Electric Industries S.A.S et ne peuvent etre utilisees ou divulguees a des tiers quels qu'ils soient sans son accord ecrit. Seuls nous engagent nos devis et les plans et schemas annexes. Les appareils representes sur ce schéma sont en position ouvert - désarmés - débrochés - toutes sources coupées.

Feeder 2 - Option FLAIR MV Fault on HTA Wiring	Feeder 3 Local or Remote Mode (1 = Local)	Feeder 3 CB or Switch Close	Feeder 3 Line Disconnector Close	Feeder 3 protection relay Watch Dog OK	Feeder 3 Fuse OK	Feeder 3 Earth Fault	Feeder 3 - Option FLAIR MV Fault on HTA Wiring

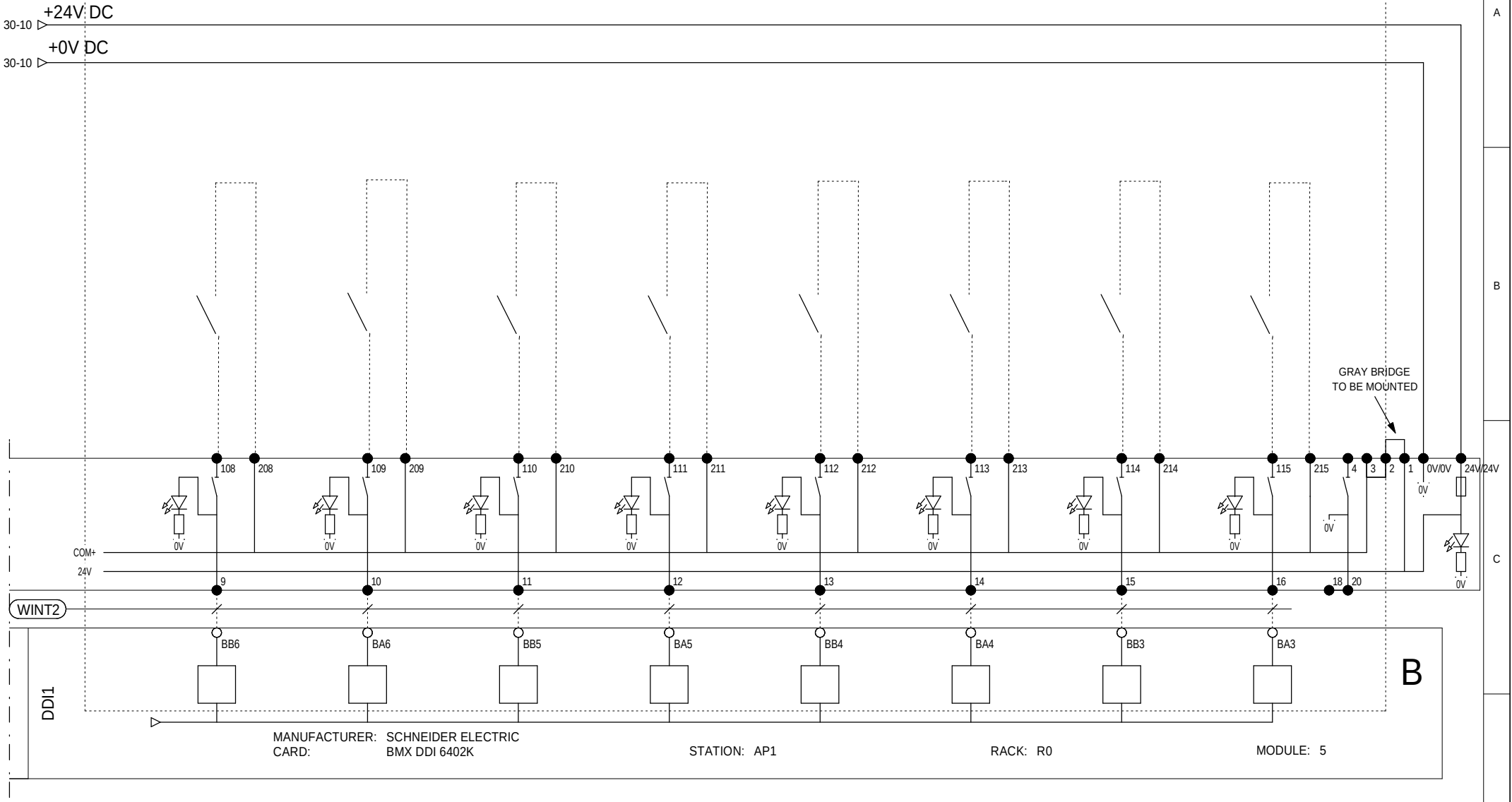

Ind. Rev	Date Date	Modification / Modification	Archiv. Micro-filmed	Ind. Rev	Date Date	Modification / Modification	Archiv. Micro-filmed
00	17/03/2014	Edition originale / First issue					

ADVANCED Digitals Inputs
- 6 FEEDERS

GRID MONITORING CONTROL CAB.
(GRID MCC)
ADVANCED 6 FEEDERS

Schneider Electric

Released for Manufacturing
Printed on 2014/03/19

EAV5829303

Projet - No commande Project - Order No.	Indice Rev	Folio Sheet
	00	32

A3 suite - 01/2008

The technical information contained in this document is the exclusive property of Schneider Electric Industries S.A.S and cannot be used or disclosed to third parties of any kind without its written consent. Only those drawings and diagrams marked "Released for Manufacturing" are to be used for execution and installation purposes. All devices shown in the diagrams are in open position, drawn out with operating mechanism discharged and all power sources off.

Les informations techniques contenues dans ce document sont la propriete exclusive de Schneider Electric Industries S.A.S et ne peuvent etre utilisees ou divulguees a des tiers quels qu'ils soient sans son accord ecrit. Seuls nous engagent les dessins et diagrammes marqués "Released for Manufacturing". Les appareils representes sur ce schéma sont en position ouvert - désarmés - débrochés - toutes sources coupées.

Feeder 4 Local or Remote Mode (1 = Local)	Feeder 4 CB or Switch Close	Feeder 4 Line Disconnector Close	Feeder 4 protection relay Watch Dog OK	Feeder 4 Fuse OK	Feeder 4 Earth Fault	Feeder 4 - Option FLAIR MV Fault on HTA Wiring	Feeder 5 Local or Remote Mode (1 = Local)

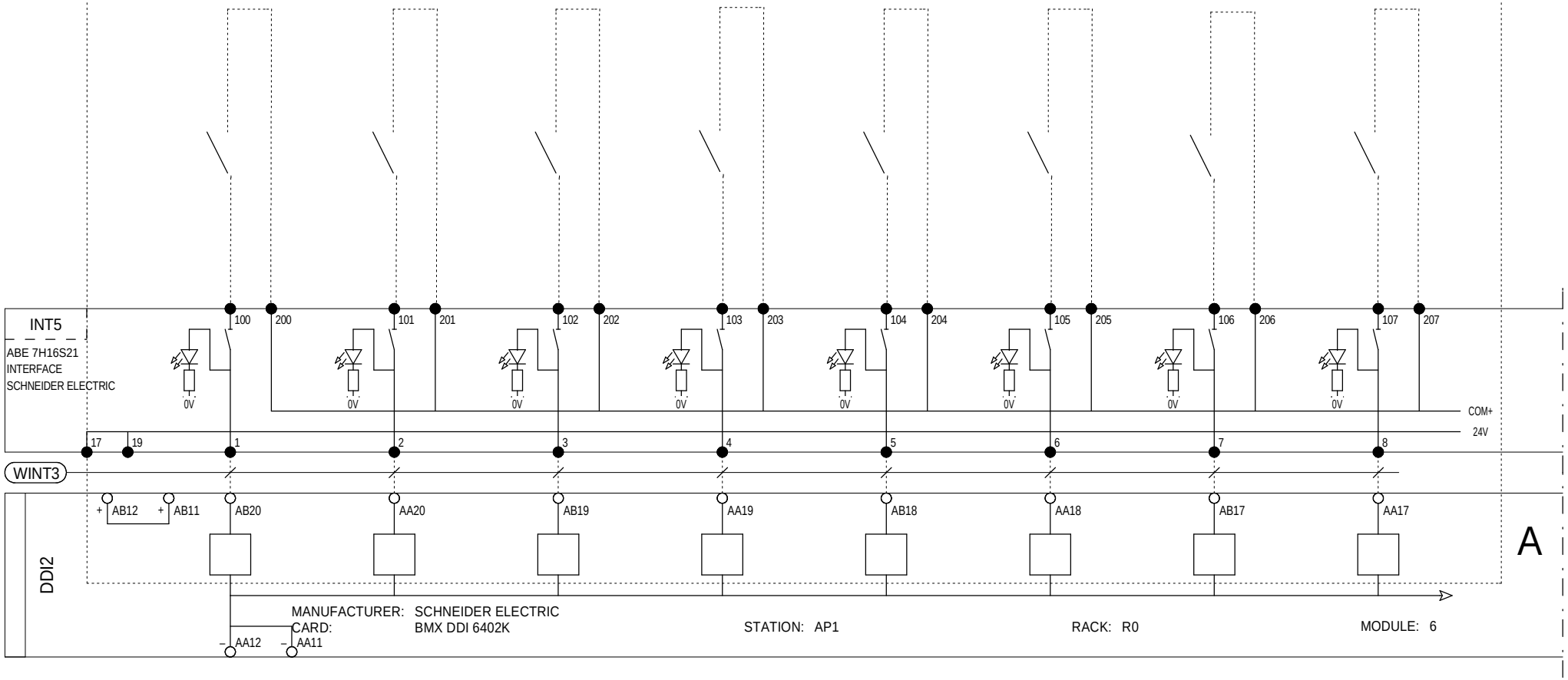

=
+MCC

Ind. Rev	Date Date	Modification / Modification	Archiv. Micro-filmed	Ind. Rev	Date Date	Modification / Modification	Archiv. Micro-filmed
00	17/03/2014	Edition originale / First issue					

ADVANCED Digitals Inputs
- 6 FEEDERS

GRID MONITORING CONTROL CAB.
(GRID MCC)
ADVANCED 6 FEEDERS

Released for Manufacturing
Printed on 2014/03/19

Schneider Electric

EAV5829303

Projet - No commande Project - Order No.	Indice Rev	Folio Sheet
	00	33

A3 suite - 01/2008

The technical information contained in this document is the exclusive property of Schneider Electric Industries S.A.S and cannot be used or disclosed to third parties of any kind without its written consent. Only those drawings and diagrams marked "for execution" are to be used for the purpose of manufacture and assembly. All drawings shown in this document are in open position, drawn out with operating mechanism discharged and all power sources off.

Les informations techniques contenues dans ce document sont la propriete exclusive de Schneider Electric Industries S.A.S et ne peuvent etre utilisees ou divulguees a des tiers quels qu'ils soient sans son accord ecrit. Seuls nous engageant sur ce schéma sont en position ouvert - désarmés - débrochés - toutes sources coupées.

Feeder 5 CB or Switch Close	Feeder 5 Line Disconnector Close	Feeder 5 protection relay Watch Dog OK	Feeder 5 Fuse OK	Feeder 5 Earth Fault	Feeder 5 - Option FLAIR MV Fault on HTA Wiring	Feeder 6 Local or Remote Mode (1 = Local)	Feeder 6 CB or Switch Close

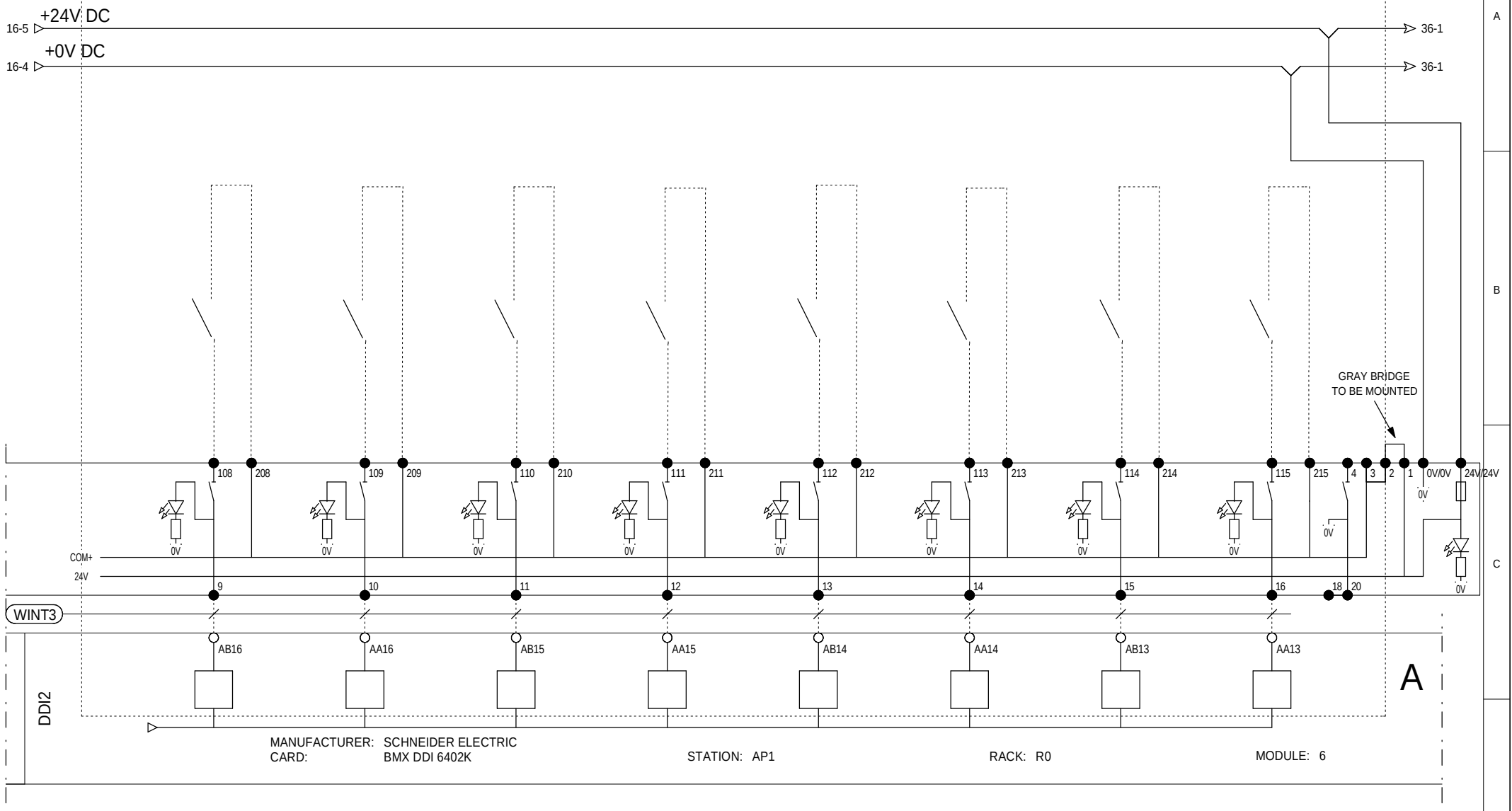

Ind. Rev	Date Date		Archiv. Micro-filmed	Ind. Rev	Date Date	Modification / Modification	Archiv. Micro-filmed
00	17/03/2014	Edition originale / First issue					

ADVANCED Digitals Inputs
- 6 FEEDERS

GRID MONITORING CONTROL CAB.
(GRID MCC)
ADVANCED 6 FEEDERS

Released for Manufacturing
Printed on 2014/03/19

Schneider Electric

EAV5829303

Projet - No commande Project - Order No.	Indice Rev	Folio Sheet
	00	34

A3 suite - 01/2008

The technical information contained in this document is the exclusive property of Schneider Electric Industries S.A.S and cannot be used or disclosed to third parties of any kind without its written consent. Only those drawings and diagrams marked "for execution" or "approved for execution" are to be used for execution. All devices shown in the diagrams are in open position, drawn out with operating mechanism discharged and all power sources off.

Les informations techniques contenues dans ce document sont la propriete exclusive de Schneider Electric Industries S.A.S et ne peuvent etre utilisees ou divulguees a des tiers quels qu'ils soient sans son accord ecrit. Seuls nous engageant sur ce schéma sont en position ouvert - désarmés - débrochés - toutes sources coupées.

Feeder 6	Feeder 6	Feeder 6	Feeder 6	Feeder 6 - Option FLAIR	Counting Cell	Counting Cell	Grid Box - EM Pulse 2
Line Disconnector Close	protection relay Watch Dog OK	Fuse OK	Earth Fault	MV Fault on HTA Wiring	Fuse OK	CB voltage measurement close	Active Energy produced pulse

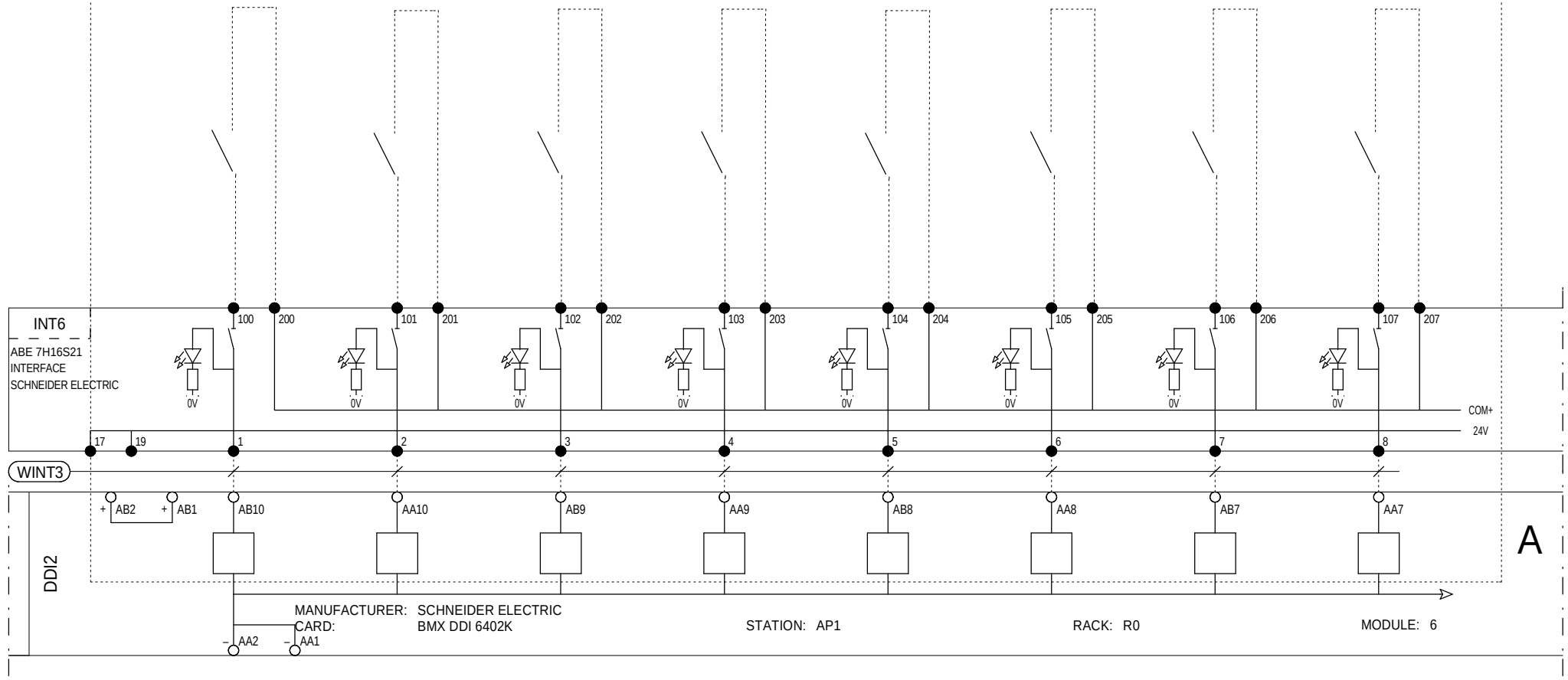

Ind. Rev	Date Date	Modification / Modification	Archiv. Micro-filmed	Ind. Rev	Date Date	Modification / Modification	Archiv. Micro-filmed
00	17/03/2014	Edition originale / First issue					

ADVANCED Digitals Inputs
- 6 FEEDERS

GRID MONITORING CONTROL CAB.
(GRID MCC)
ADVANCED 6 FEEDERS

Schneider Electric

Released for Manufacturing
Printed on 2014/03/19

EAV5829303

Projet - No commande / Project - Order No.	Indice Rev	Folio Sheet
	00	35

A3 suite - 01/2008

The technical information contained in this document is the exclusive property of Schneider Electric Industries S.A.S and cannot be used or disclosed to third parties of any kind without its written consent. Only those drawings and diagrams specifically referred to in an order form are binding for execution. All drawings shown in this document are in open position, drawn out with operating mechanism discharged and all power sources off.

Les informations techniques contenues dans ce document sont la propriete exclusive de Schneider Electric Industries S.A.S et ne peuvent etre utilisees ou divulguees a des tiers quels qu'ils soient sans son accord ecrit. Seuls nous engageant nous ne prenons en compte que les plans et schemas annexes a votre commande. Les appareils representes sur ce schéma sont en position ouvert - désarmés - débrochés - toutes sources coupées.

Grid Box - EM Pulse 2	Grid Box - EM Pulse 2	Grid Box - EM Pulse 2	Grid Box	Spare	Spare	Spare	Spare
Reactive Energy produced pulse	Active Energy consumed pulse	Reactive Energy consumed pulse	Monitoring switch linked with a remote control room	Spare	Spare	Spare	Spare

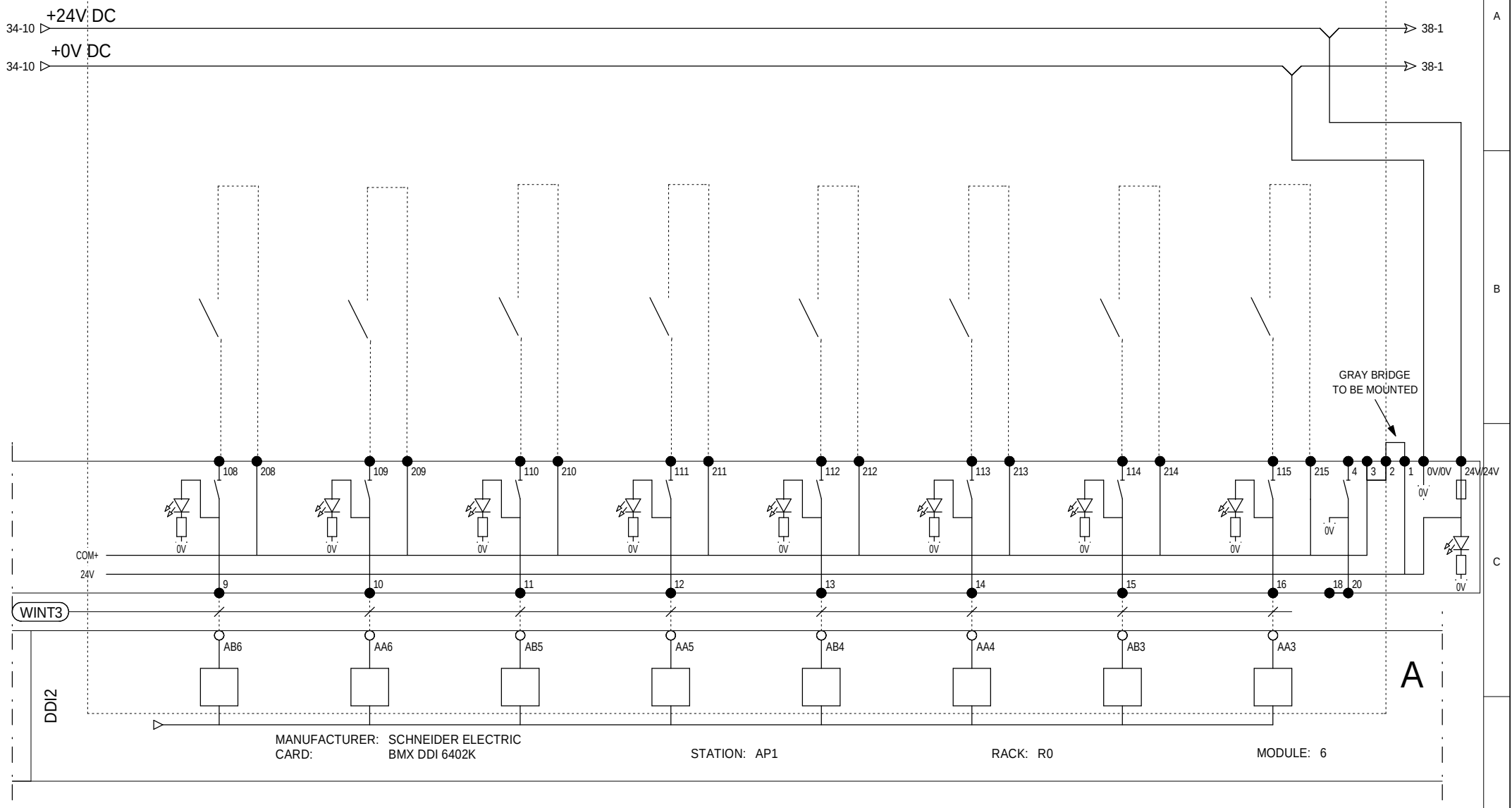

Ind. Rev	Date Date		Archiv. Micro-filmed	Ind. Rev	Date Date	Modification / Modification	Archiv. Micro-filmed
00	17/03/2014	Edition originale / First issue					

ADVANCED Digitals Inputs
- 6 FEEDERS

GRID MONITORING CONTROL CAB.
(GRID MCC)
ADVANCED 6 FEEDERS

Released for Manufacturing
Printed on 2014/03/19

Schneider Electric

EAV5829303

Projet - No commande / Project - Order No.	Indice Rev	Folio Sheet
	00	36

A3 suite - 01/2008

The technical information contained in this document is the exclusive property of Schneider Electric Industries S.A.S and cannot be used or disclosed to third parties of any kind without its written consent. Only those drawings and diagrams marked "for execution" are to be used for execution purposes. All devices shown in the diagrams are in open position, drawn out with operating mechanism discharged and all power sources off.

Les informations techniques contenues dans ce document sont la propriete exclusive de Schneider Electric Industries S.A.S et ne peuvent etre utilisees ou divulguees a des tiers quels qu'ils soient sans son accord ecrit. Seuls nous engageant sur ce schéma sont en position ouvert - désarmés - débrochés - toutes sources coupées.

DCS (DEIE) Coupling authorization	DCS (DEIE) End of decoupling request	DCS (DEIE) Decoupling request	DCS (DEIE) End of active power limitation	DCS (DEIE) Active power limitation request	DCS (DEIE) End of reactive power limitation	DCS (DEIE) Reactive power limitation request	DCS (DEIE) Maintenance Mode

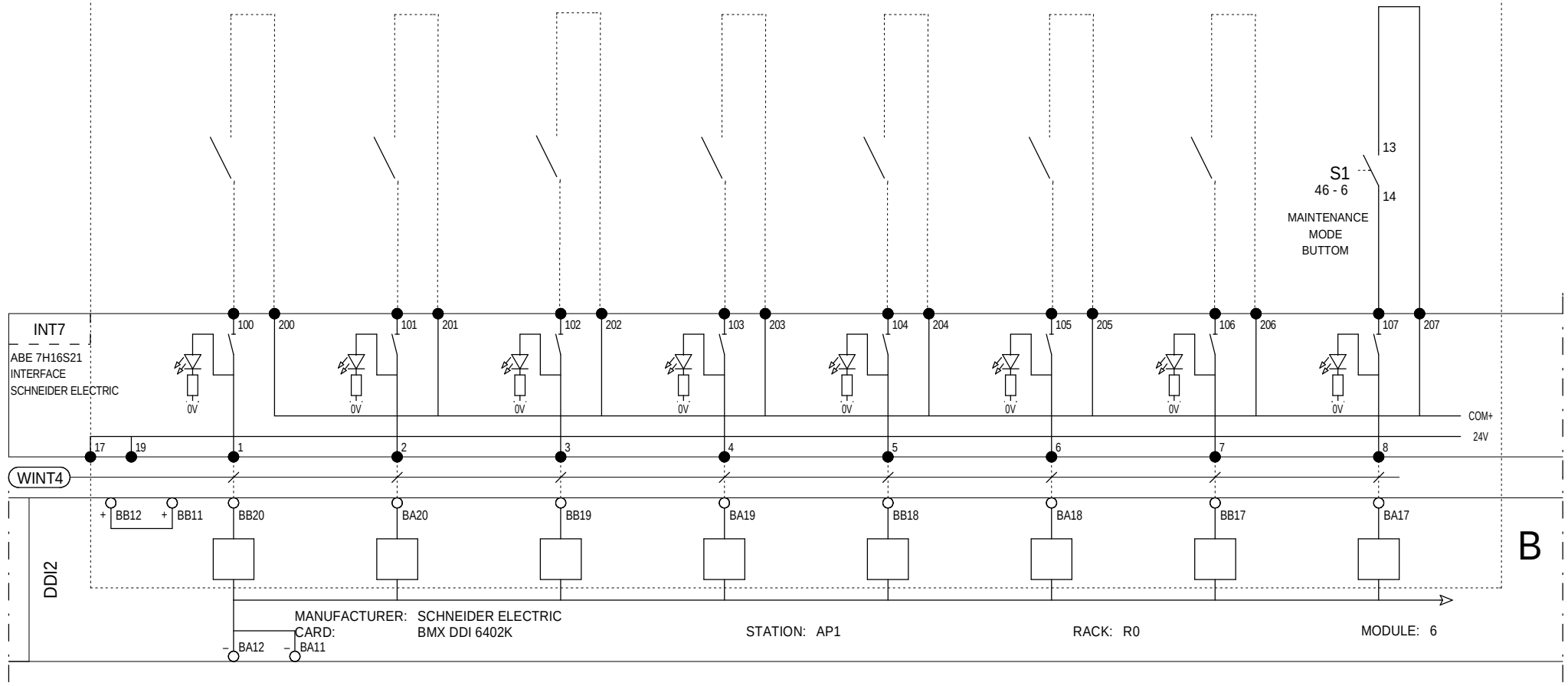

=
+MCC

Ind. Rev	Date Date	Modification / Modification	Archiv. Micro-filmed	Ind. Rev	Date Date	Modification / Modification	Archiv. Micro-filmed
00	17/03/2014	Edition originale / First issue					

ADVANCED Digitals Inputs
- 6 FEEDERS

GRID MONITORING CONTROL CAB.
(GRID MCC)
ADVANCED 6 FEEDERS

Schneider Electric

Released for Manufacturing
Printed on 2014/03/19

EAV5829303

Projet - No commande / Project - Order No.	Indice Rev	Folio Sheet
	00	37

A3 suite - 01/2008

The technical information contained in this document is the exclusive property of Schneider Electric Industries S.A.S and cannot be used or disclosed to third parties of any kind without its written consent. Only those drawings and diagrams marked "for execution" are to be used for execution. All drawings shown in this document are in open position, drawn out with operating mechanism discharged and all power sources off.

Les informations techniques contenues dans ce document sont la propriete exclusive de Schneider Electric Industries S.A.S et ne peuvent etre utilisees ou divulguees a des tiers quels qu'ils soient sans son accord ecrit. Seuls nous engageant pour ce document les plans et schemas marqués "a executer" et les diagrammes et schemas montrés dans ce document. Les appareils representés sur ce schéma sont en position ouvert - désarmés - débrochés - toutes sources coupées.

DCS (DEIE) End of Emergency request	DCS (DEIE) Emergency request	DCS Additional input for DCS	DCS Additional input for DCS	Spare Spare	Spare Spare	Spare Spare	Spare Spare

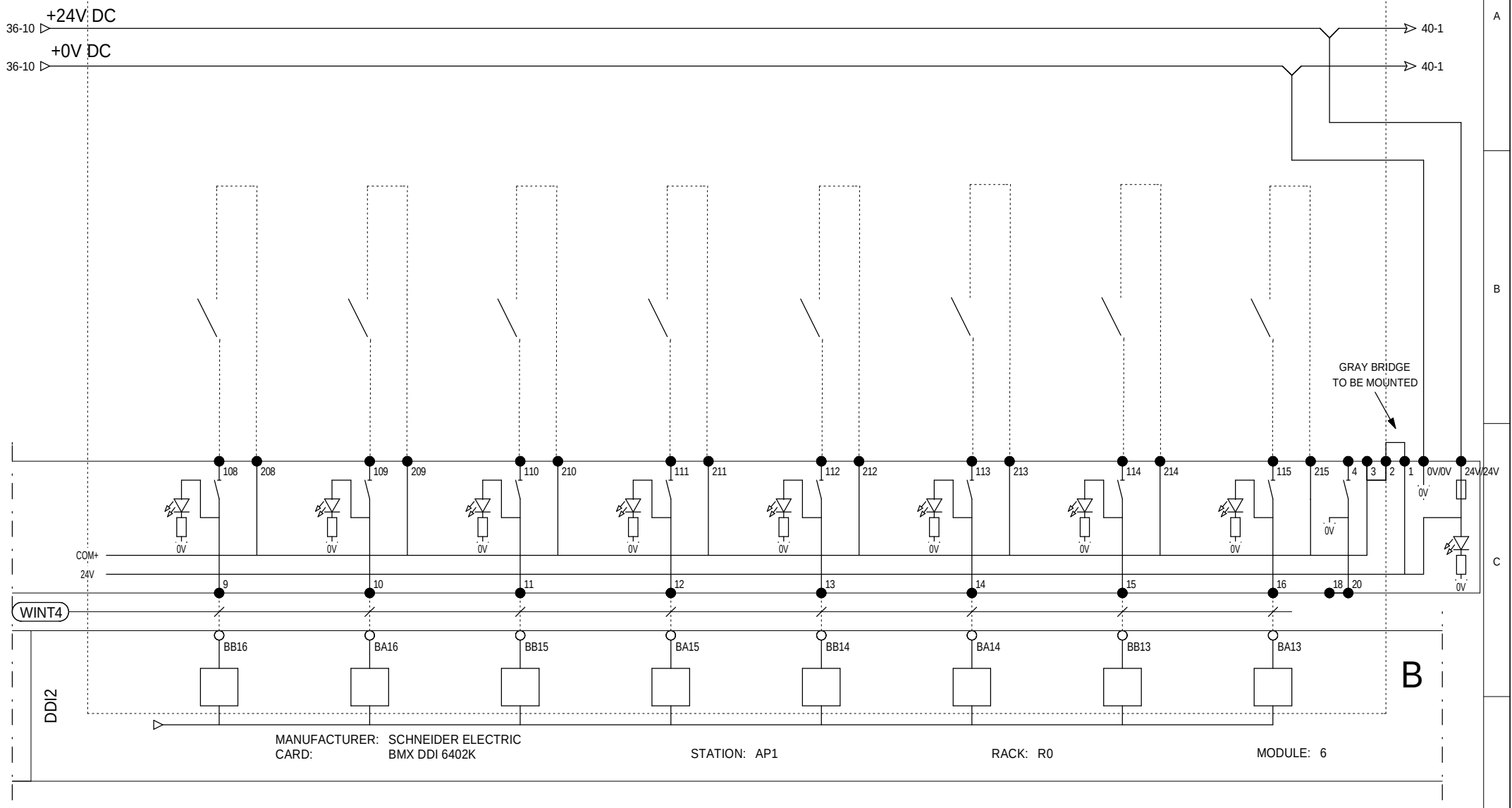

Ind. Rev	Date Date		Archiv. Micro-filmed	Ind. Rev	Date Date	Modification / Modification	Archiv. Micro-filmed
00	17/03/2014	Edition originale / First issue					

ADVANCED Digitals Inputs
- 6 FEEDERS

GRID MONITORING CONTROL CAB.
(GRID MCC)
ADVANCED 6 FEEDERS

Schneider Electric

Released for Manufacturing
Printed on 2014/03/19

EAV5829303

Projet - No commande Project - Order No.	Indice Rev	Folio Sheet
	00	38

A3 suite - 01/2008

The technical information contained in this document is the exclusive property of Schneider Electric Industries S.A.S and cannot be used or disclosed to third parties of any kind without its written consent. Only those drawings and diagrams marked "for construction" or "for approval" or "for execution" are to be used for execution. All devices shown in the diagrams are in open position, drawn out with operating mechanism discharged and all power sources off.

Les informations techniques contenues dans ce document sont la propriete exclusive de Schneider Electric Industries S.A.S et ne peuvent etre utilisees ou divulguees a des tiers quels qu'ils soient sans son accord ecrit. Seuls nous engageant sur ce schéma sont en position ouvert - désarmés - débrochés - toutes sources coupées.

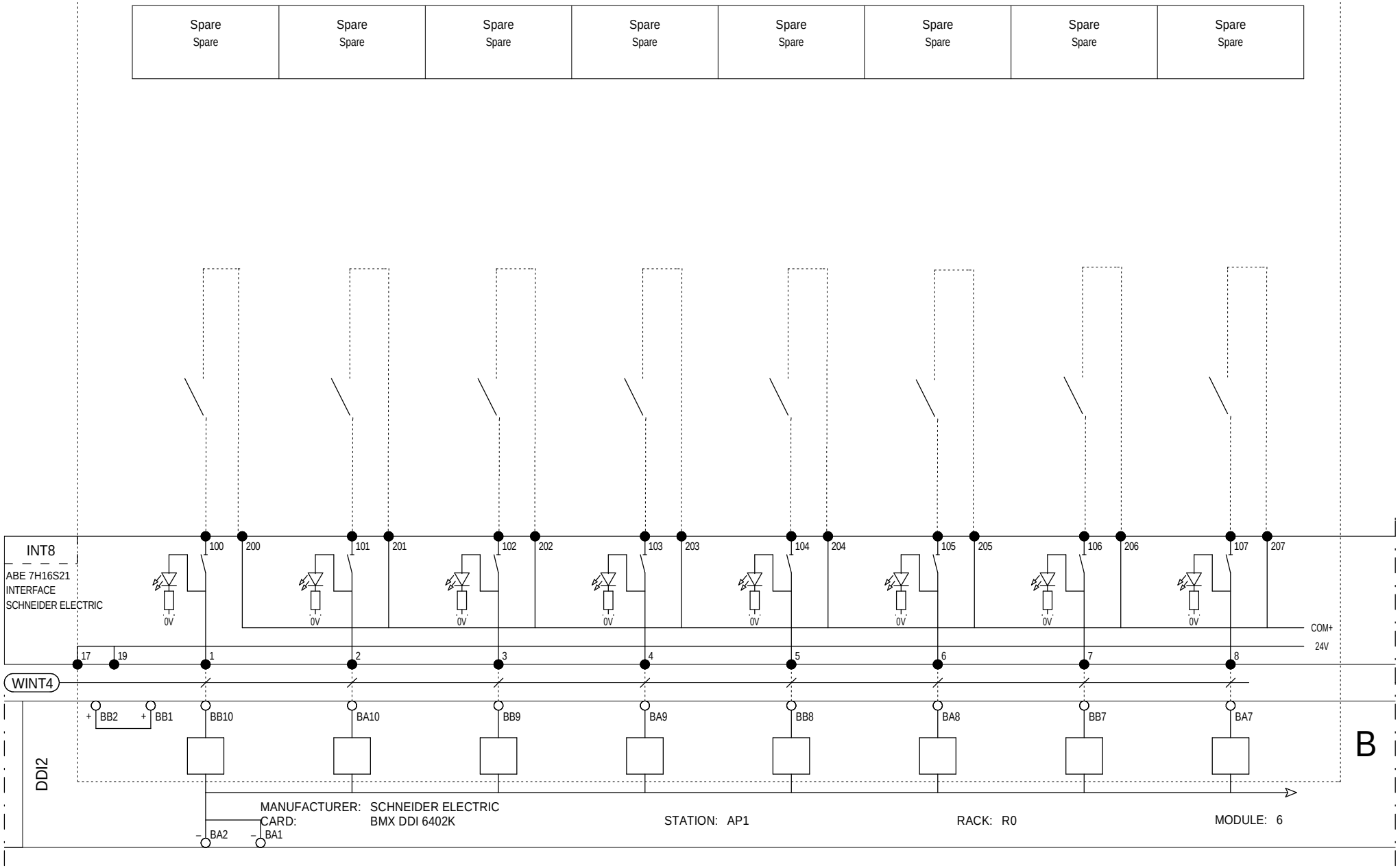

Ind. Rev	Date Date	Modification / Modification	Archiv. Micro-filmed	Ind. Rev	Date Date	Modification / Modification	Archiv. Micro-filmed
00	17/03/2014	Edition originale / First issue					

ADVANCED Digitals Inputs
- 6 FEEDERS

GRID MONITORING CONTROL CAB.
(GRID MCC)
ADVANCED 6 FEEDERS

Schneider Electric

Released for Manufacturing
Printed on 2014/03/19

EAV5829303

Projet - No commande / Project - Order No.	Indice Rev	Folio Sheet
	00	39

A3 suite - 01/2008

The technical information contained in this document is the exclusive property of Schneider Electric Industries S.A.S and cannot be used or disclosed to third parties of any kind without its written consent. Only those drawings and diagrams marked "for execution" or "for approval" are to be used for execution. All devices shown in the diagrams are in open position, drawn out with operating mechanism discharged and all power sources off.

Les informations techniques contenues dans ce document sont la propriete exclusive de Schneider Electric Industries S.A.S et ne peuvent etre utilisees ou divulguees a des tiers quels qu'ils soient sans son accord ecrit. Seuls nous engageant sur ce schéma sont en position ouvert - désarmés - débrochés - toutes sources coupées.

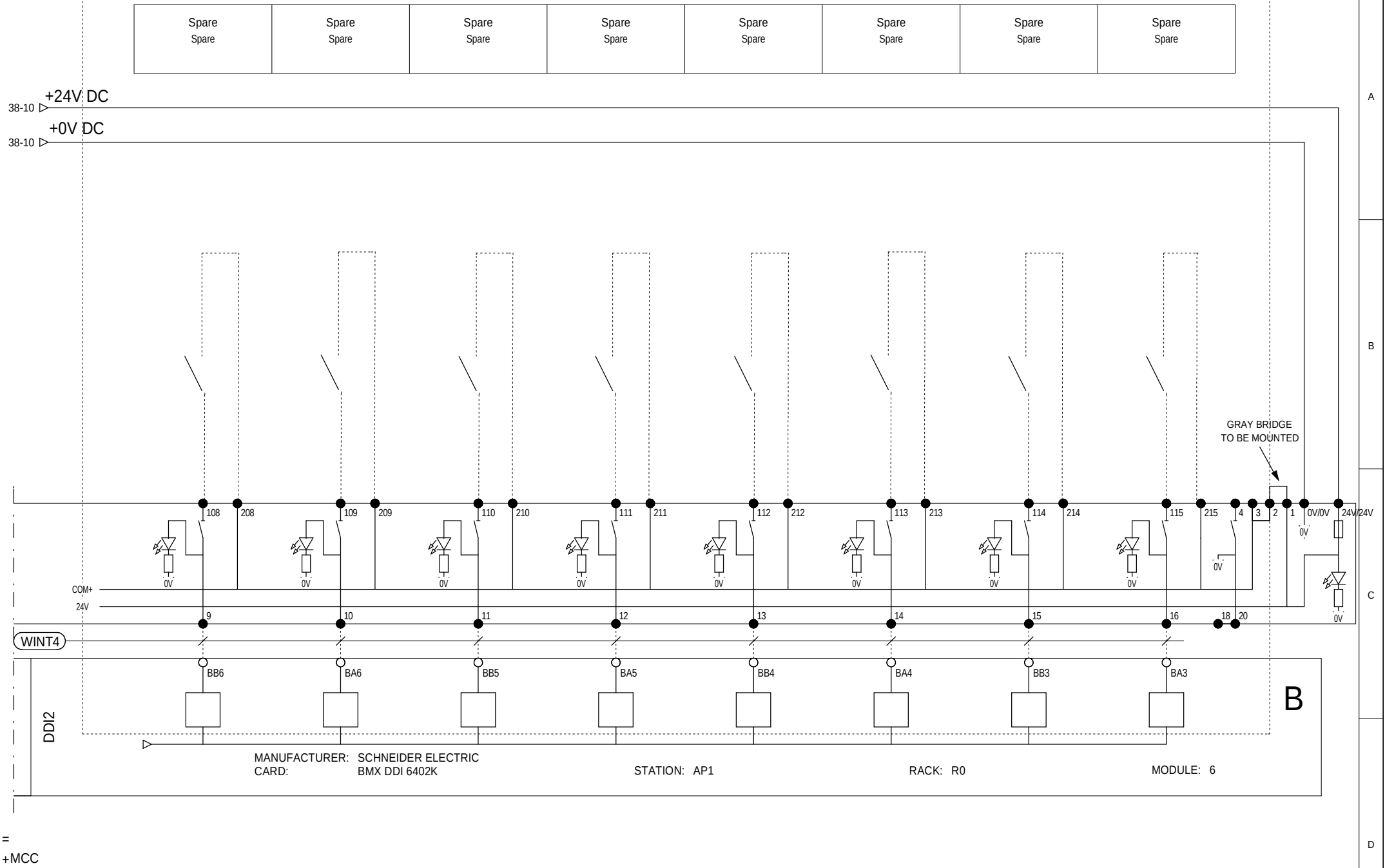

Ind. Rev	Date Date		Archiv. Micro-filmed	Ind. Rev	Date Date	Modification / Modification	Archiv. Micro-filmed
00	17/03/2014	Edition originale / First issue					

ADVANCED Digitals Inputs
- 6 FEEDERS

GRID MONITORING CONTROL CAB.
(GRID MCC)
ADVANCED 6 FEEDERS

Released for Manufacturing
Printed on 2014/03/19

Schneider Electric

EAV5829303

Projet - No commande / Project - Order No.	Indice Rev	Folio Sheet
	00	40

A3 suite - 01/2008

Incomer	Incomer	Incomer	Incomer	Coupling Cell	Coupling Cell	Feeder Aux	Feeder Aux
Incomer 1 - Open order	Incomer 1 - Close order	Incomer 2 - Open order	Incomer 2 - Close order	Coupling - Open order	Coupling - Close order	Feeder Aux - Open order	Feeder Aux - Close order

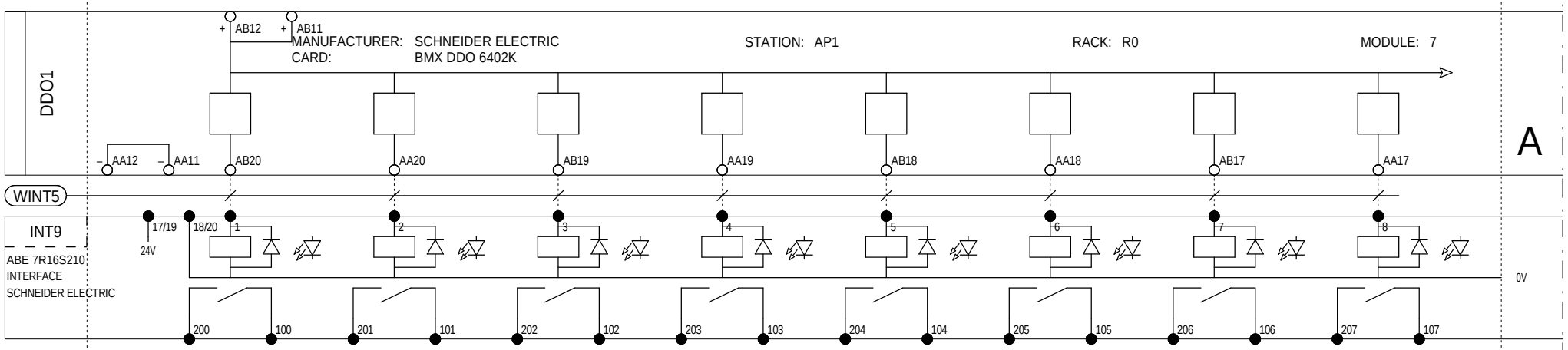

=
+MCC

Ind. Rev	Date Date	Modification / Modification	Archiv. Micro-filmed	Ind. Rev	Date Date	Modification / Modification	Archiv. Micro-filmed
00	17/03/2014	Edition originale / First issue					

ADVANCED Digitals Ouputs
- 6 FEEDERS

GRID MONITORING CONTROL CAB.
(GRID MCC)
ADVANCED 6 FEEDERS

Schneider Electric

Released for Manufacturing
Printed on 2014/03/19

EAV5829303

Projet - No commande
Project - Order No.

Indice Rev 00

Folio Sheet 41

A3 suite - 01/2008

The technical information contained in this document is the exclusive property of Schneider Electric Industries S.A.S and cannot be used or disclosed to third parties of any kind without its written consent. Only those drawings and diagrams which are specifically agreed in writing to be delivered with the order are to be considered as drawings and are in open position, drawn out with operating mechanism discharged and all power sources off.

Les informations techniques contenues dans ce document sont la propriete exclusive de Schneider Electric Industries S.A.S et ne peuvent etre utilisees ou divulguees a des tiers quels qu'ils soient sans son accord ecrit. Seuls nous engageant sur ce schéma sont en position ouvert - désarmés - débrochés - toutes sources coupées.

The technical information contained in this document is the exclusive propery of Schneider Electric Industries S.A.S and cannot be used or disclosed to third parties of any kind without its written consent. Only those drawings and diagrams marked "for manufacturing" are to be used for execution of electrical equipment. All diagrams are in open position, drawn out with operating mechanism discharged and all power sources off.

Les informations techniques contenues dans ce document sont la propriete exclusive de Schneider Electric Industries S.A.S et ne peuvent etre utilisees ou divulguees a des tiers quels qu'ils soient sans son accord ecrit. Seuls nous engageant sur ce schéma sont en position ouvert - désarmés - débrochés - toutes sources coupées.

Feeder 1	Feeder 1	Feeder 1 - Option FLAIR	Feeder 2	Feeder 2	Feeder 2 - Option FLAIR	Feeder 3	Feeder 3
Feeder 1 - Open Order	Feeder 1 - Close Order	Feeder 1 - Reset MV Fault (Flair)	Feeder 2 - Open Order	Feeder 2 - Close Order	Feeder 2 - Reset MV Fault (Flair)	Feeder 3 - Open Order	Feeder 3 - Close Order

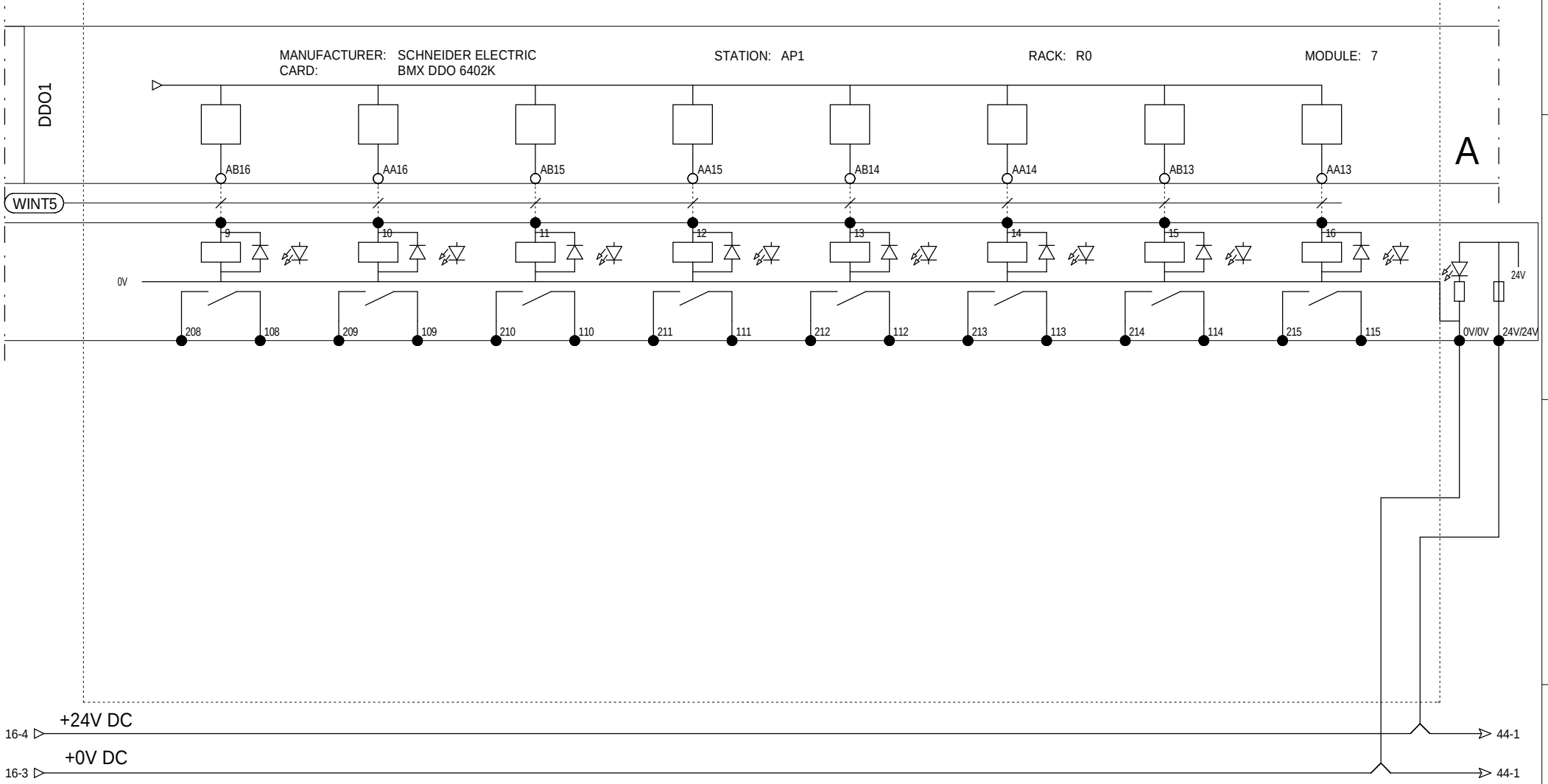

Ind. Rev	Date Date	Modification / Modification	Archiv. Micro-filmed	Ind. Rev	Date Date	Modification / Modification	Archiv. Micro-filmed
00	17/03/2014	Edition originale / First issue					

ADVANCED Digitals Ouputs
- 6 FEEDERS

GRID MONITORING CONTROL CAB.
(GRID MCC)
ADVANCED 6 FEEDERS

Schneider Electric

Released for Manufacturing
Printed on 2014/03/19

EAV5829303

Projet - No commande Project - Order No.	Indice Rev	Folio Sheet
	00	42

A3 suite - 01/2008

Feeder 3 - Option FLAIR	Feeder 4	Feeder 4	Feeder 4 - Option FLAIR	Feeder 5	Feeder 5	Feeder 5 - Option FLAIR	Feeder 6
Feeder 3 - Reset MV Fault (Flair)	Feeder 4 - Open Order	Feeder 4 - Close Order	Feeder 4 - Reset MV Fault (Flair)	Feeder 5 - Open Order	Feeder 5 - Close Order	Feeder 5 - Reset MV Fault (Flair)	Feeder 6 - Open Order

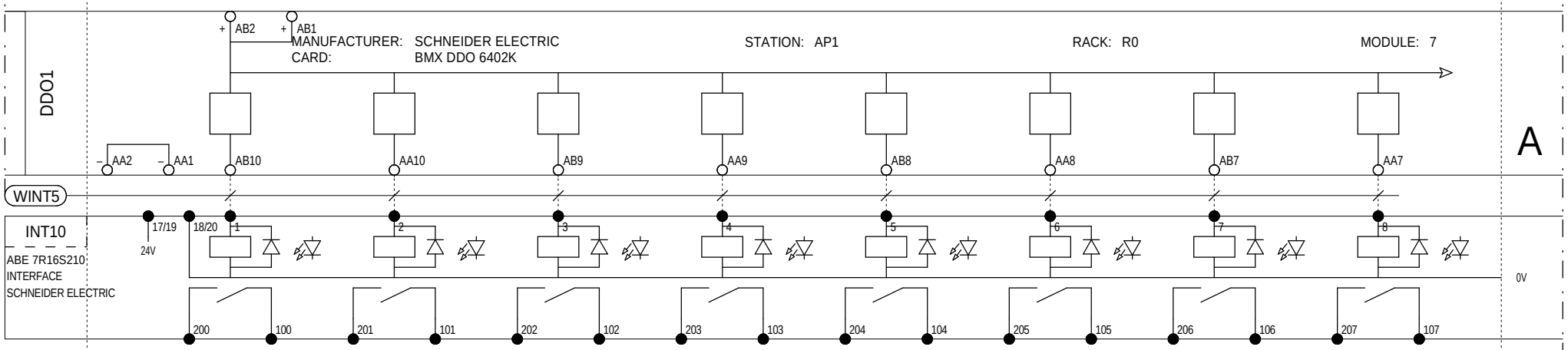

=
+MCC

The technical information contained in this document is the exclusive property of Schneider Electric Industries S.A.S and cannot be used or disclosed to third parties of any kind without its written consent. Only those drawings and diagrams specifically identified as being for construction purposes may be used for execution. All diagrams are in open position, drawn out with operating mechanism discharged and all power sources off.

Les informations techniques contenues dans ce document sont la propriete exclusive de Schneider Electric Industries S.A.S et ne peuvent etre utilisees ou divulguees a des tiers quels qu'ils soient sans son accord ecrit. Seuls nous engageant sur ce schéma sont en position ouvert - désarmés - débrochés - toutes sources coupées.

Ind. Rev	Date Date	Modification / Modification	Archiv. Micro-filmed	Ind. Rev	Date Date	Modification / Modification	Archiv. Micro-filmed
00	17/03/2014	Edition originale / First issue					

ADVANCED Digitals Ouputs
- 6 FEEDERS

GRID MONITORING CONTROL CAB.
(GRID MCC)
ADVANCED 6 FEEDERS

Schneider Electric

Released for Manufacturing
Printed on 2014/03/19

EAV5829303

Projet - No commande Project - Order No.	Indice Rev	Folio Sheet
	00	43

A3 suite - 01/2008

Feeder 6	Feeder 6 - Option FLAIR	Coupling Cell	Spare	Spare	Spare	Spare	Spare
Feeder 6 - Close Order	Feeder 6 - Reset MV Fault (Flair)	48VDC Charger - Rearm	Spare	Spare	Spare	Spare	Spare

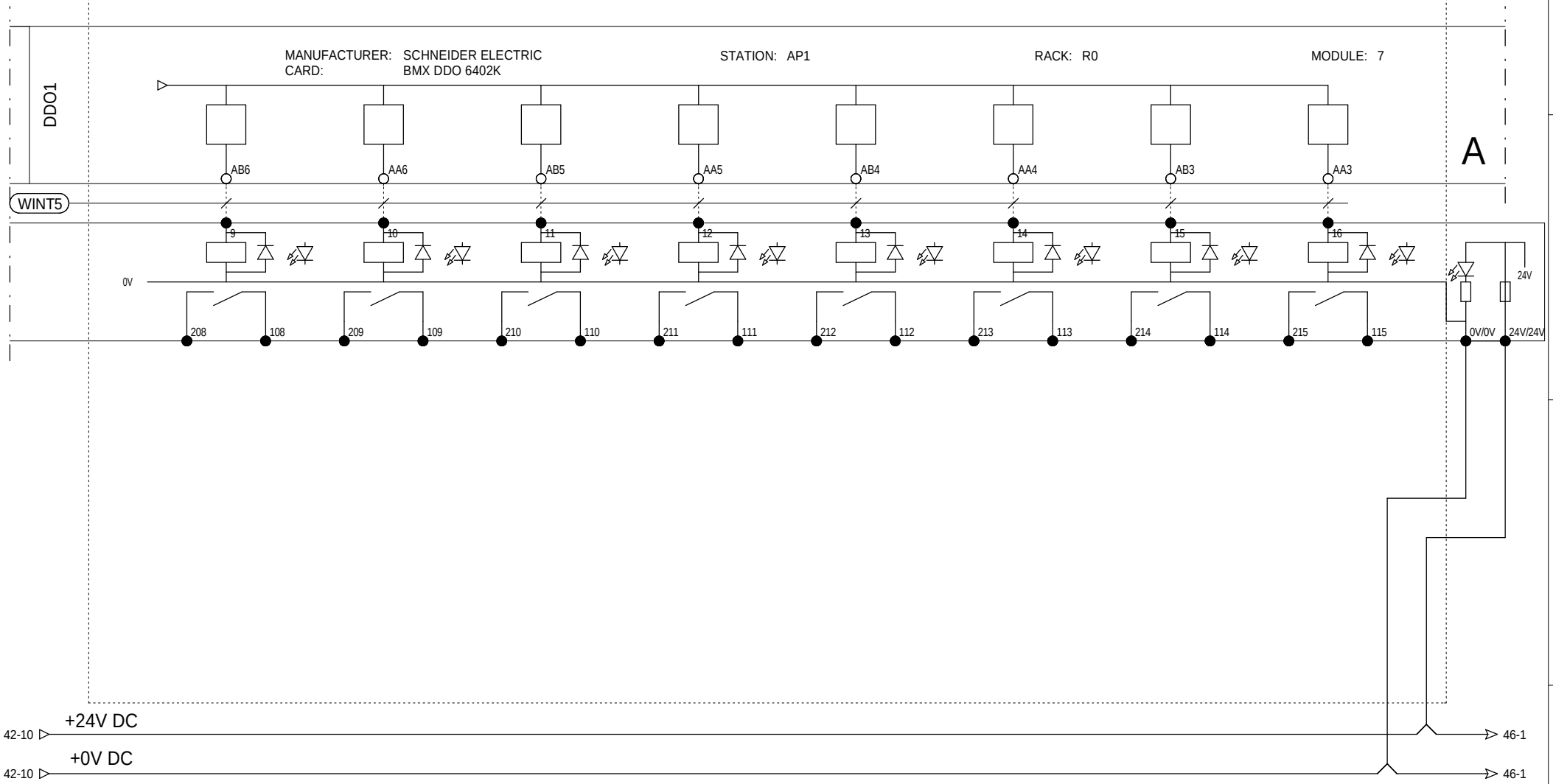

+24V DC
42-10 ▷ ▷ 46-1

+0V DC
42-10 ▷ ▷ 46-1

=
+MCC

Ind. Rev	Date Date	Modification / Modification	Archiv. Micro-filmed	Ind. Rev	Date Date	Modification / Modification	Archiv. Micro-filmed
00	17/03/2014	Edition originale / First issue					

ADVANCED Digitals Ouputs
- 6 FEEDERS

GRID MONITORING CONTROL CAB.
(GRID MCC)
ADVANCED 6 FEEDERS

Schneider Electric

Released for Manufacturing
Printed on 2014/03/18

EAV5829303

Projet - No commande
Project - Order No.

Indice Rev 00

Folio Sheet 44

A3 suite - 01/2008

The technical information contained in this document is the exclusive property of Schneider Electric Industries S.A.S and cannot be used or disclosed to third parties of any kind without its written consent. Only those drawings and diagrams marked "Released for Manufacturing" are valid for execution. All power sources must be in open position, drawn out with operating mechanism discharged and all power sources off.

Les informations techniques contenues dans ce document sont la propriete exclusive de Schneider Electric Industries S.A.S et ne peuvent etre utilisees ou divulguees a des tiers quels qu'ils soient sans son accord ecrit. Seuls nous engageant sur ce schéma sont en position ouvert - désarmés - débrochés - toutes sources coupées.

DCS (DEIE) RSE not in service	DCS (DEIE) RSE in service	DCS (DEIE) Farm coupled	DCS (DEIE) Farm decoupled	DCS (DEIE) Waiting coupling authorization	DCS (DEIE) Coupling authorization received	DCS (DEIE) End of decoupling request received	DCS (DEIE) Decoupling request received

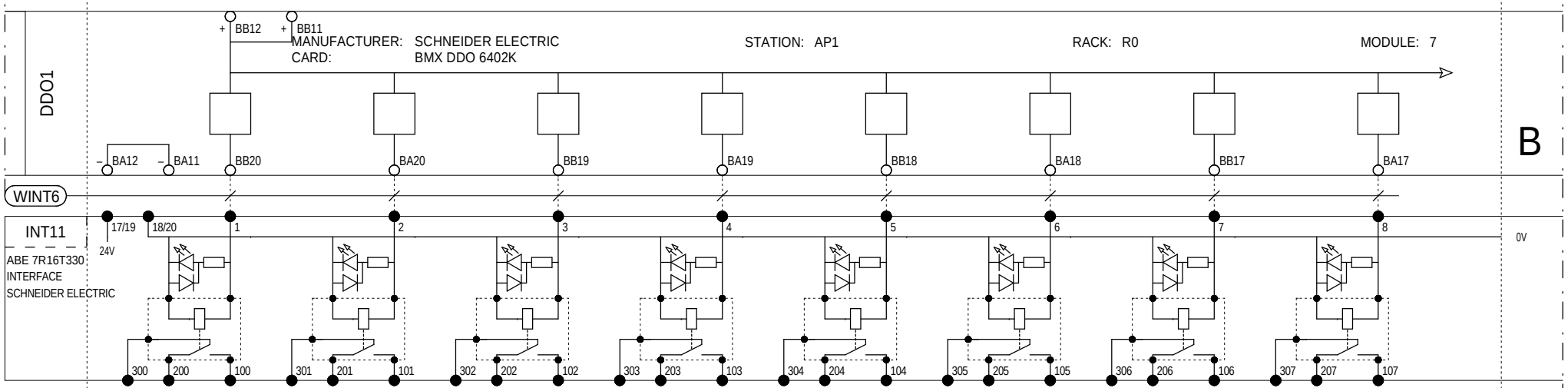

=
+MCC

Ind. Rev	Date Date	Modification / Modification	Archiv. Micro-filmed	Ind. Rev	Date Date	Modification / Modification	Archiv. Micro-filmed
00	17/03/2014	Edition originale / First issue					

ADVANCED Digitals Ouputs
- 6 FEEDERS

GRID MONITORING CONTROL CAB.
(GRID MCC)
ADVANCED 6 FEEDERS

Schneider Electric

Released for Manufacturing
Printed on 2014/03/19

EAV5829303

Projet - No commande / Project - Order No.	Indice Rev	Folio Sheet
	00	45

The technical information contained in this document is the exclusive property of Schneider Electric Industries S.A.S and cannot be used or disclosed to third parties of any kind without its written consent. Only those drawings and documents specifically approved in writing for execution of the contract are valid. All drawings are in open position, drawn out with operating mechanism discharged and all power sources off.

Les informations techniques contenues dans ce document sont la propriete exclusive de Schneider Electric Industries S.A.S et ne peuvent etre utilisees ou divulguees a des tiers quels qu'ils soient sans son accord ecrit. Seuls nous engageant sur ce schéma sont en position ouvert - désarmés - débrochés - toutes sources coupées.

A3 suite - 01/2008

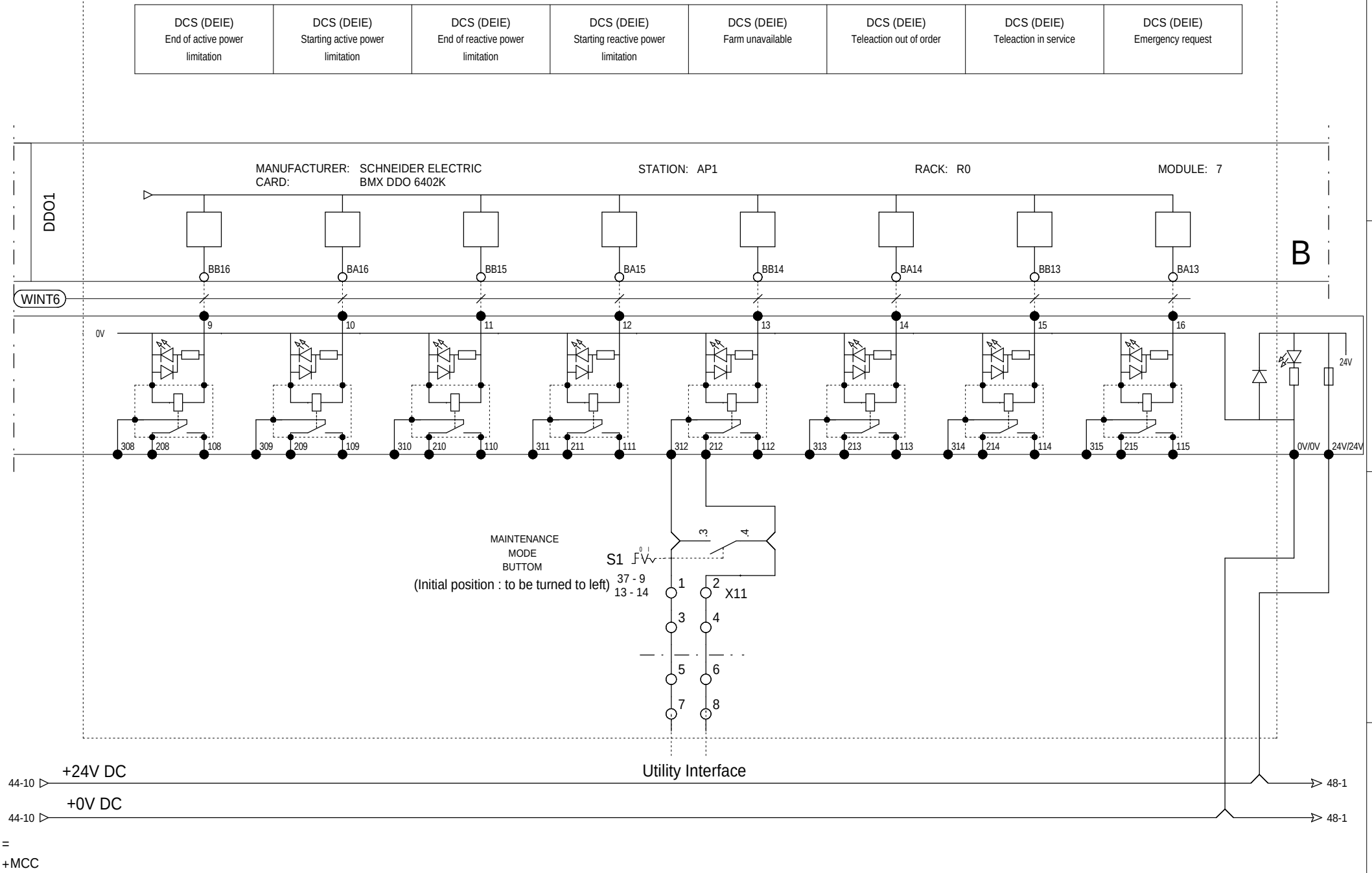

The technical information contained in this document is the exclusive property of Schneider Electric Industries S.A.S and cannot be used or disclosed to third parties of any kind without its written consent. Only those drawings and diagrams which have been specifically approved for execution by Schneider Electric Industries are in open position, drawn out with operating mechanism discharged and all power sources off.

Les informations techniques contenues dans ce document sont la propriete exclusive de Schneider Electric Industries S.A.S et ne peuvent etre utilisees ou divulguees a des tiers quels qu'ils soient sans son accord ecrit. Seuls nous engageant sur ce schéma sont en position ouvert - désarmés - débrochés - toutes sources coupées.

Ind. Rev	Date Date		Archiv. Micro-filmed	Ind. Rev	Date Date	Modification / Modification	Archiv. Micro-filmed
00	17/03/2014	Edition originale / First issue					

ADVANCED Digitals Ouputs - 6 FEEDERS

GRID MONITORING CONTROL CAB. (GRID MCC) ADVANCED 6 FEEDERS

Schneider Electric

Released for Manufacturing
Printed on 2014/03/19

EAV5829303

Projet - No commande Project - Order No.	Indice Rev	Folio Sheet
	00	46

A3 suite - 01/2008

DCS (DEIE)	Spare	Spare	Spare	Spare	Spare	Spare	Spare
End of Emergency request	Spare	Spare	Spare	Spare	Spare	Spare	Spare

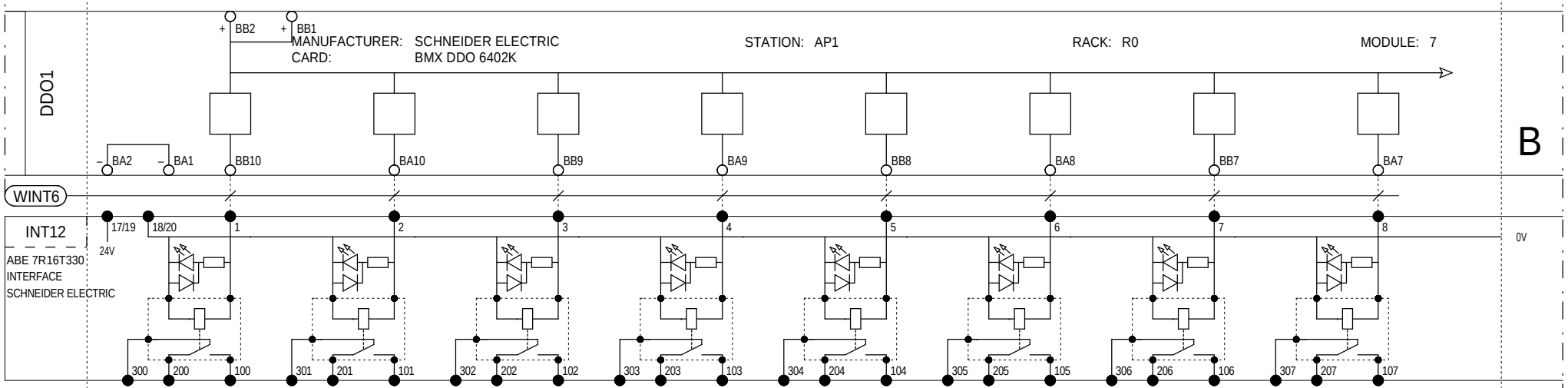

=
+MCC

Ind. Rev	Date Date	Modification / Modification	Archiv. Micro-filmed	Ind. Rev	Date Date	Modification / Modification	Archiv. Micro-filmed
00	17/03/2014	Edition originale / First issue					

ADVANCED Digitals Ouputs
- 6 FEEDERS

GRID MONITORING CONTROL CAB.
(GRID MCC)
ADVANCED 6 FEEDERS

Schneider Electric

Released for Manufacturing
Printed on 2014/03/19

EAV5829303

Projet - No commande / Project - Order No.	Indice Rev	Folio Sheet
	00	47

The technical information contained in this document is the exclusive property of Schneider Electric Industries S.A.S and cannot be used or disclosed to third parties of any kind without its written consent. Only those drawings and documents specifically approved for use with the equipment covered by this document are valid. All power sources are in open position, drawn out with operating mechanism discharged and all power sources off.

Les informations techniques contenues dans ce document sont la propriete exclusive de Schneider Electric Industries S.A.S et ne peuvent etre utilisees ou divulguees a des tiers quels qu'ils soient sans son accord ecrit. Seuls nous engageant pour ce document, les plans et schemas ainsi que les documents de l'appareil sont valides. Appareils representes sur ce schéma sont en position ouvert - désarmés - débrochés - toutes sources coupées.

A3 suite - 01/2008

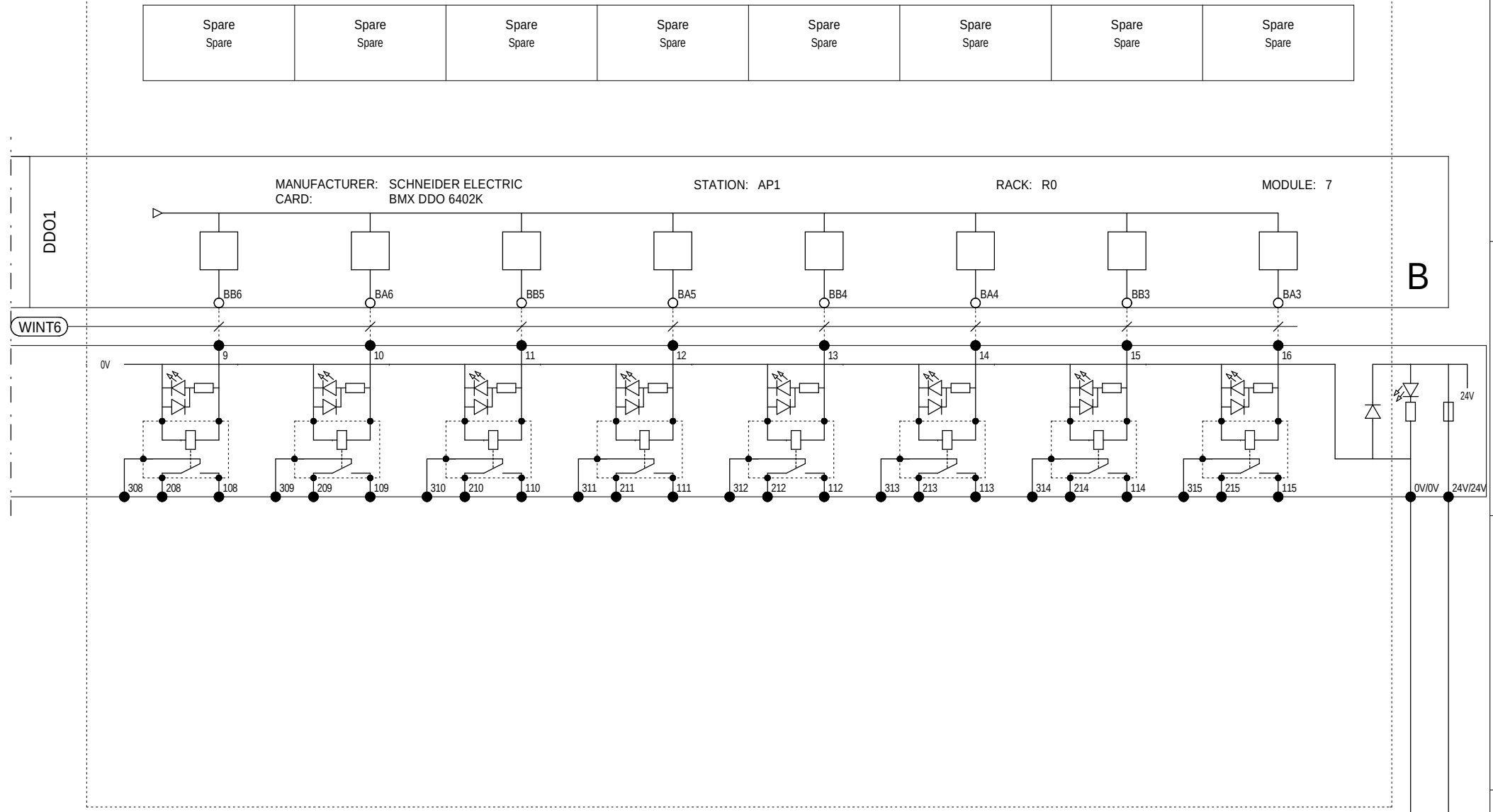

The technical information contained in this document is the exclusive propery of Schneider Electric Industries S.A.S and cannot be used or disclosed to third parties of any kind without its written consent. Only those drawings and diagrams which are specified for construction and/or execution of the contract are valid. All diagrams are in open position, drawn out with operating mechanism discharged and all power sources off.

Les informations techniques contenues dans ce document sont la propriete exclusive de Schneider Electric Industries S.A.S et ne peuvent etre utilisees ou divulguees a des tiers quels qu'ils soient sans son accord ecrit. Seuls nous engageant sur ce schéma sont en position ouvert - désarmés - débrochés - toutes sources coupées.

Ind. Rev	Date Date		Archiv. Micro-filmed	Ind. Rev	Date Date	Modification / Modification	Archiv. Micro-filmed
00	17/03/2014	Edition originale / First issue					

ADVANCED Digitals Ouputs
- 6 FEEDERS

GRID MONITORING CONTROL CAB.
(GRID MCC)
ADVANCED 6 FEEDERS

Schneider Electric

Released for Manufacturing
Printed on 2014/03/18

EAV5829303

Projet - No commande / Project - Order No.	Indice Rev	Folio Sheet
	00	48

A3 suite - 01/2008

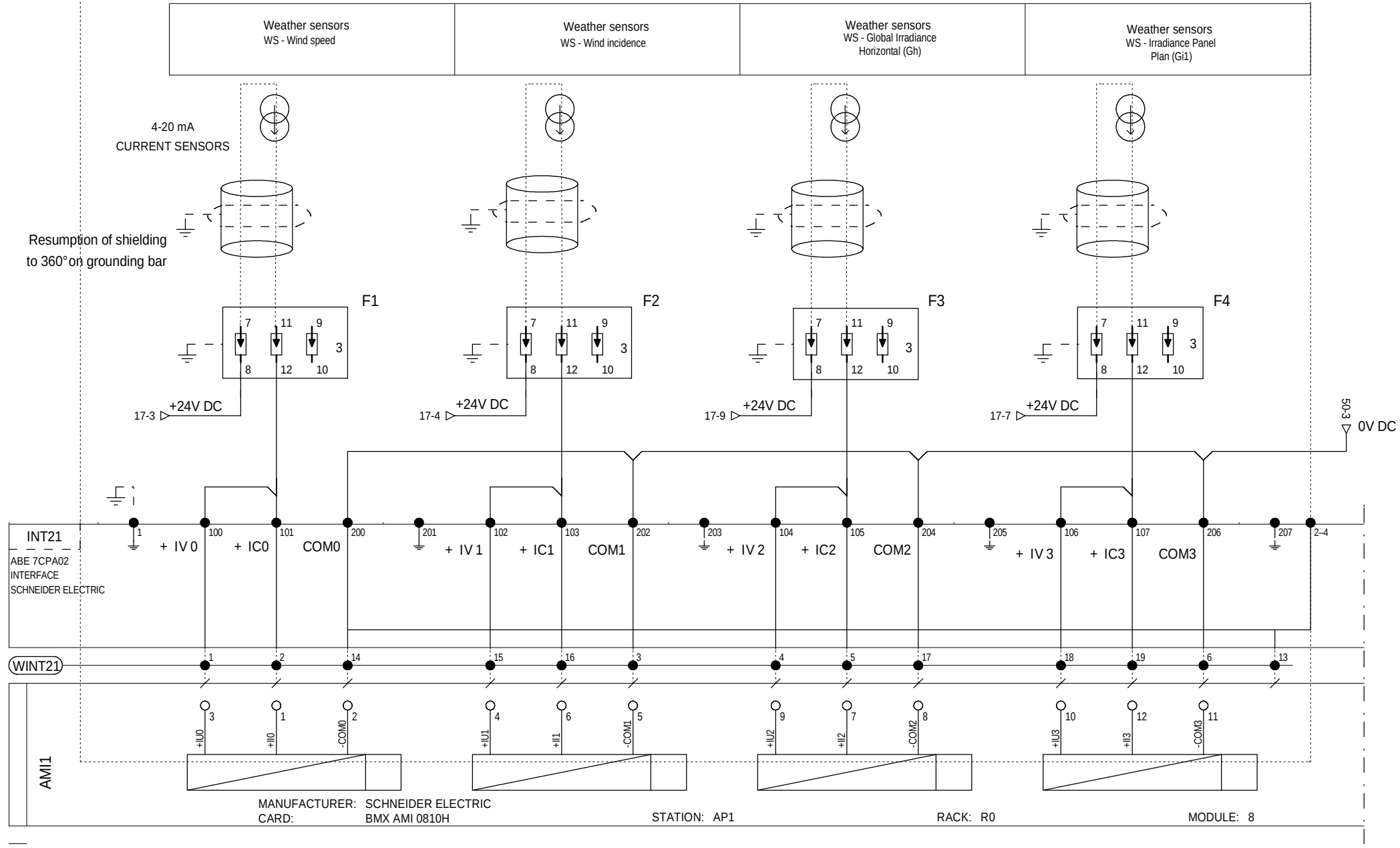

=
+MCC

The technical information contained in this document is the exclusive property of Schneider Electric Industries S.A.S and cannot be used or disclosed to third parties of any kind without its written consent. Only those drawings and diagrams marked "released for manufacturing" are to be used for execution. All drawings shown in this document are in open position, drawn out with operating mechanism discharged and all power sources off.

Les informations techniques contenues dans ce document sont la propriete exclusive de Schneider Electric Industries S.A.S et ne peuvent etre utilisees ou divulguees a des tiers quels qu'ils soient sans son accord ecrit. Seuls nous engageant sur ce schéma sont en position ouvert - désarmés - débrochés - toutes sources coupées.

Ind. Rev	Date Date		Archiv. Micro-filmed	Ind. Rev	Date Date	Modification / Modification	Archiv. Micro-filmed
00	17/03/2014	Edition originale / First issue					

ADVANCED WS Analog Inputs

GRID MONITORING CONTROL CAB.
(GRID MCC)
ADVANCED 6 FEEDERS

Schneider Electric

Released for Manufacturing
Printed on 2014/03/19

EAV5829303

Projet - No commande / Project - Order No.	Indice / Rev	Folio / Sheet
	00	49

A3 suite - 01/2008

The technical information contained in this document is the exclusive property of Schneider Electric Industries S.A.S and cannot be used or disclosed to third parties of any kind without its written consent. Only those drawings and diagrams marked "released for manufacturing" are to be used for execution of installations or equipments. All devices shown in the diagrams are in open position, drawn out with operating mechanism discharged and all power sources off.

Les informations techniques contenues dans ce document sont la propriete exclusive de Schneider Electric Industries S.A.S et ne peuvent etre utilisees ou divulguees a des tiers quels qu'ils soient sans son accord ecrit. Seuls nous engageant les dessins marqués "pour fabrication" et les schemas d'execution. Les appareils representes sur ce schéma sont en position ouvert - désarmés - débrochés - toutes sources coupées.

Weather sensors WS - Irradiance Panel Plan (Gi2)	Weather sensors WS - Spare 1	Weather sensors WS - Spare 2	Weather sensors WS - Spare 3

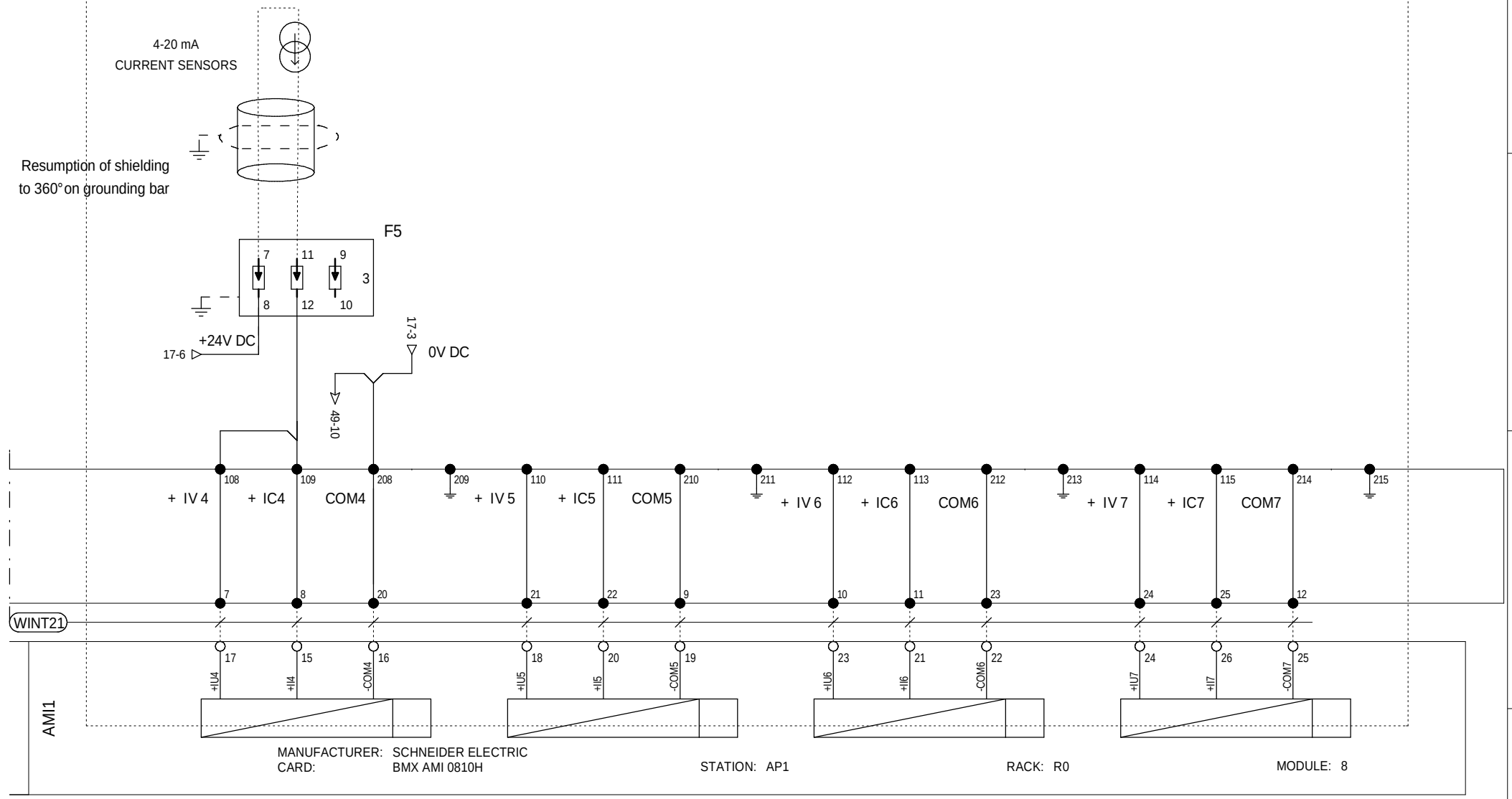

=
+MCC

Ind. Rev	Date Date		Archiv. Micro-filmed	Ind. Rev	Date Date	Modification / Modification	Archiv. Micro-filmed
00	17/03/2014	Edition originale / First issue					

ADVANCED WS Analog Inputs

GRID MONITORING CONTROL CAB.
(GRID MCC)
ADVANCED 6 FEEDERS

Schneider Electric

Released for Manufacturing
Printed on 2014/03/19

EAV5829303

Projet - No commande Project - Order No.	Indice Rev	Folio Sheet
	00	50

A3 suite - 01/2008

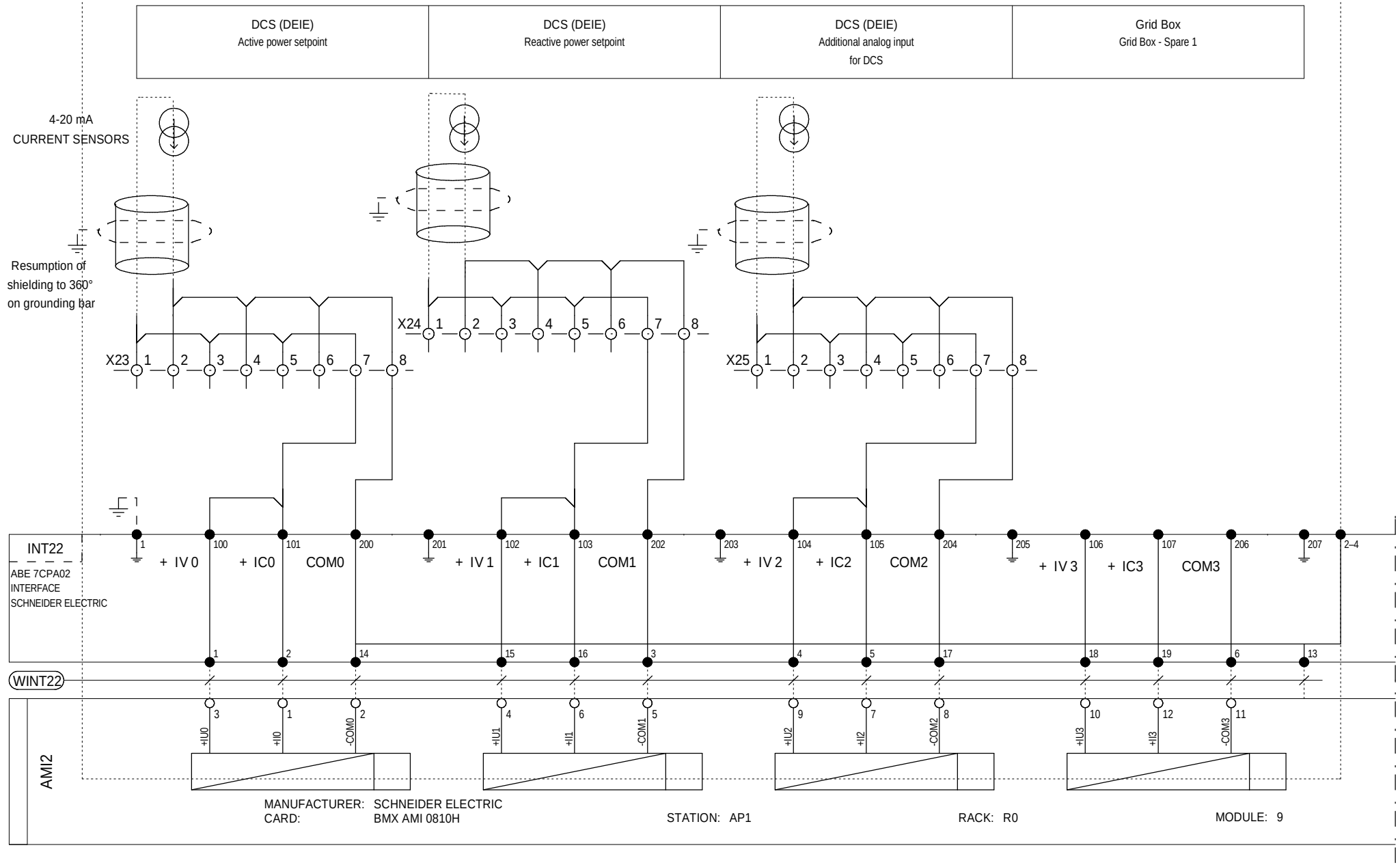

=
+MCC

Ind. Rev	Date Date		Archiv. Micro-filmed	Ind. Rev	Date Date	Modification / Modification	Archiv. Micro-filmed
00	17/03/2014	Edition originale / First issue					

ADVANCED DCS Analog Inputs

GRID MONITORING CONTROL CAB.
(GRID MCC)
ADVANCED 6 FEEDERS

Schneider Electric

Released for Manufacturing
Printed on 2014/03/19

EAV5829303

Projet - No commande Project - Order No.	Indice Rev	Folio Sheet
	00	51

The technical information contained in this document is the exclusive property of Schneider Electric Industries S.A.S and cannot be used or disclosed to third parties of any kind without its written consent. Only those drawings and diagrams marked "released for manufacturing" are to be used in conjunction with the delivery when all power sources are in open position, drawn out with operating mechanism discharged and all power sources off.

Les informations techniques contenues dans ce document sont la propriete exclusive de Schneider Electric Industries S.A.S et ne peuvent etre utilisees ou divulguees a des tiers quels qu'ils soient sans son accord ecrit. Seuls nous engageant pour ce document, les plans et schemas "mis en fabrication" et ceux signes par nos representants sur ce schéma sont en position ouvert - désarmés - débrochés - toutes sources coupées.

A3 suite - 01/2008

The technical information contained in this document is the exclusive property of Schneider Electric Industries S.A.S and cannot be used or disclosed to third parties of any kind without its written consent. Only those drawings and diagrams marked "Released for Manufacturing" are to be used for execution. All drawings shown in this document are in open position, drawn out with operating mechanism discharged and all power sources off.

Les informations techniques contenues dans ce document sont la propriete exclusive de Schneider Electric Industries S.A.S et ne peuvent etre utilisees ou divulguees a des tiers quels qu'ils soient sans son accord ecrit. Seuls nous engagent les plans mentionnes "Bons pour Fabrication". Les appareils representes sur ce schéma sont en position ouvert - désarmés - débrochés - toutes sources coupées.

Grid Box	Grid Box	Grid Box	Grid Box
Grid Box - Spare 2	Grid Box - Spare 3	Grid Box - Spare 4	Grid Box - Spare 5

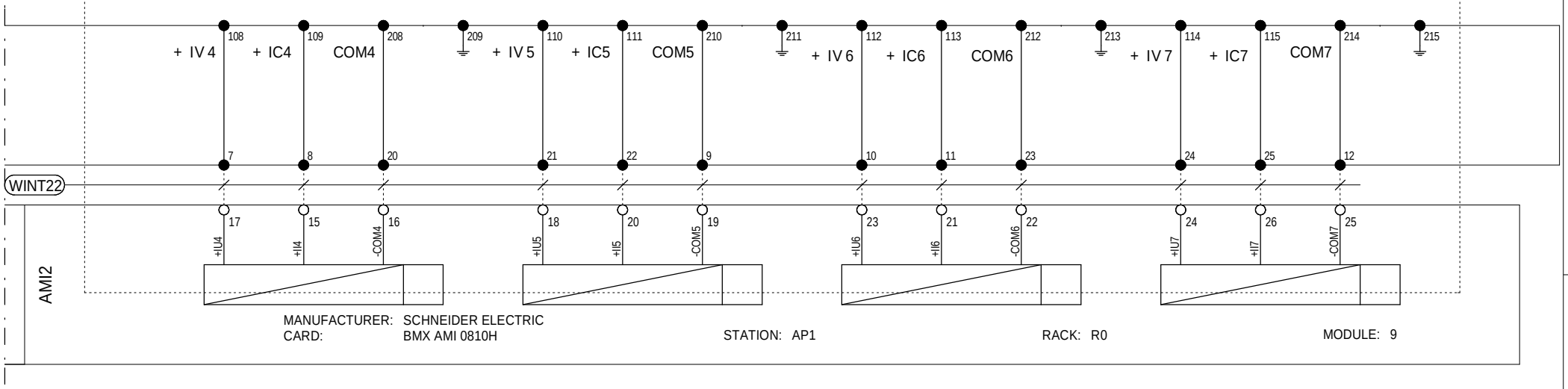

Ind. Rev	Date Date		Archiv. Micro-filmed	Ind. Rev	Date Date	Modification / Modification	Archiv. Micro-filmed
00	17/03/2014	Edition originale / First issue					

ADVANCED DCS Analog Inputs

GRID MONITORING CONTROL CAB.
(GRID MCC)
ADVANCED 6 FEEDERS

Schneider Electric

Released for Manufacturing
Printed on 2014/03/19

EAV5829303

Projet - No commande / Project - Order No.	Indice Rev	Folio Sheet
	00	52

A3 suite - 01/2008

The technical information contained in this document is the exclusive property of Schneider Electric Industries S.A.S and cannot be used or disclosed to third parties of any kind without its written consent. Only those drawings and diagrams marked "Released for Manufacturing" are to be used for wiring or assembly purposes when the diagrams are in open position, drawn out with operating mechanism discharged and all power sources off.

Les informations techniques contenues dans ce document sont la propriete exclusive de Schneider Electric Industries S.A.S et ne peuvent etre utilisees ou divulguees a des tiers quels qu'ils soient sans son accord ecrit. Seuls nous engageant sur ce schéma sont en position ouvert - désarmés - débrochés - toutes sources coupées.

Grid Box	Weather sensors	Grid Box	Grid Box
Grid Box - Internal Temperature	WS - External Temperature	Grid Box - Spare 1	Grid Box - Spare 2

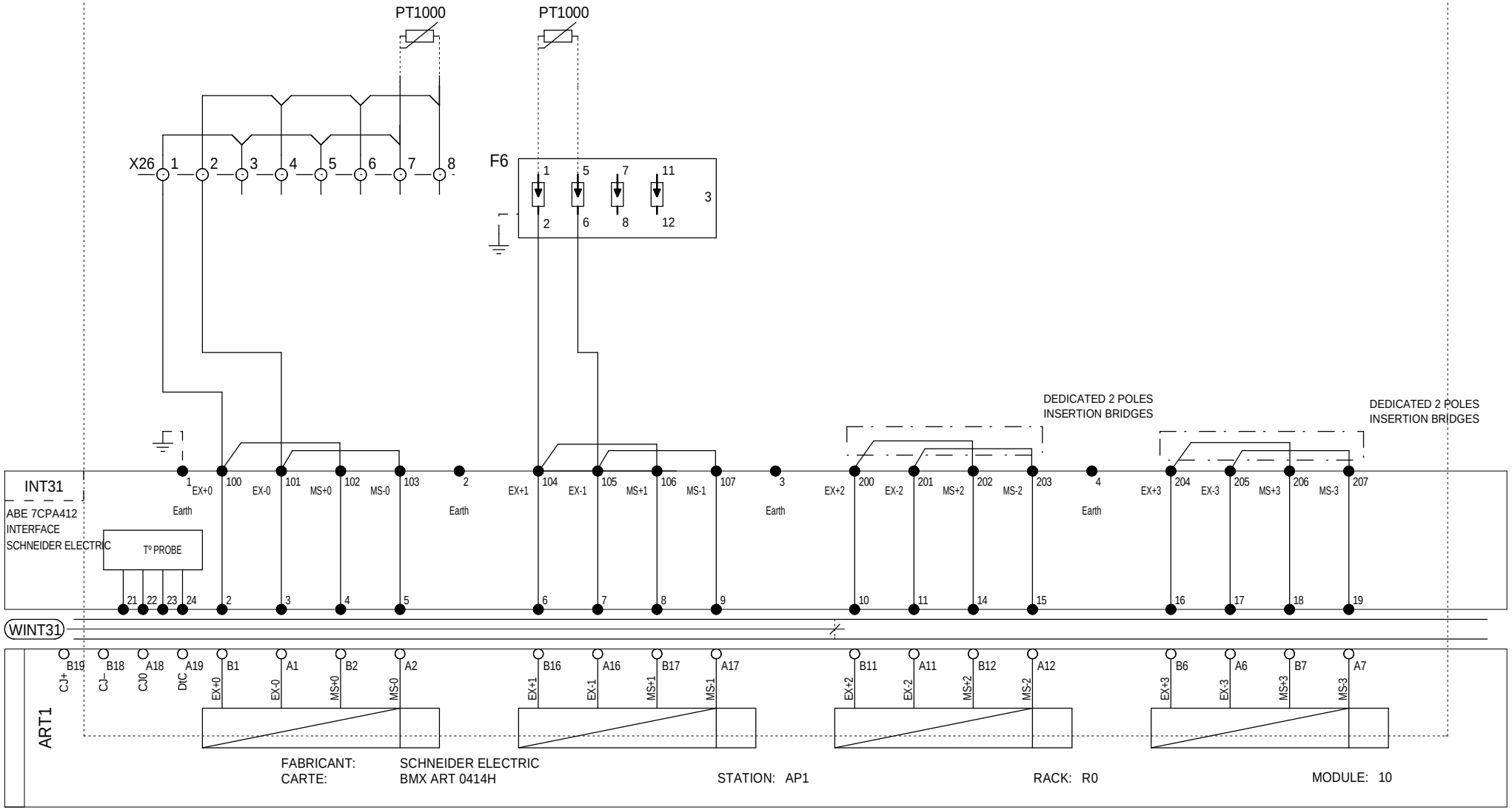

=
+MCC

Ind. Rev	Date Date		Archiv. Micro-filmed	Ind. Rev	Date Date	Modification / Modification	Archiv. Micro-filmed
00	17/03/2014	Edition originale / First issue					

ADVANCED PT1000 Analog Inputs

GRID MONITORING CONTROL CAB.
(GRID MCC)
ADVANCED 6 FEEDERS

Released for Manufacturing
Printed on 2014/03/19

Schneider Electric

EAV5829303

Projet - No commande / Project - Order No.	Indice Rev	Folio Sheet
	00	53

A3 suite - 01/2008

The technical information contained in this document is the exclusive property of Schneider Electric Industries S.A.S and cannot be used or disclosed to third parties of any kind without its written consent. Only those drawings and diagrams marked "Released for Manufacturing" are to be used for execution and installation purposes. All drawings are in open position, drawn out with operating mechanism discharged and all power sources off.

Les informations techniques contenues dans ce document sont la propriete exclusive de Schneider Electric Industries S.A.S et ne peuvent etre utilisees ou divulguees a des tiers quels qu'ils soient sans son accord ecrit. Seuls nous engageant sur ce schéma sont en position ouvert - désarmés - débrochés - toutes sources coupées.

Utility measurement Grid Box - Voltage	Utility measurement Grid Box - Active Power	Utility measurement Grid Box - Reactive Power	Grid Box Grid Box - Spare 1

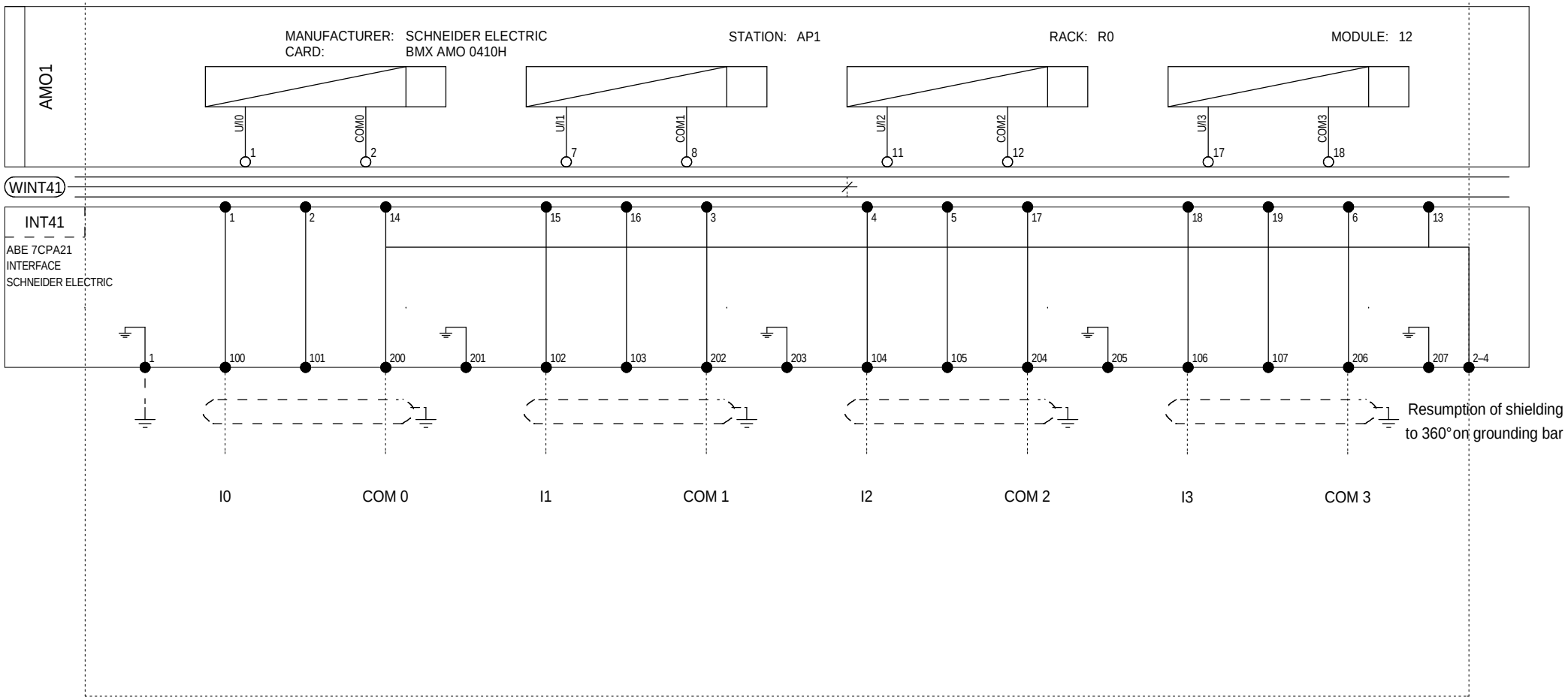

=
+MCC

Ind. Rev	Date Date		Archiv. Micro-filmed	Ind. Rev	Date Date		Archiv. Micro-filmed
00	17/03/2014	Edition originale / First issue					

Modification / Modification

ADVANCED Analog Outputs

GRID MONITORING CONTROL CAB.
(GRID MCC)
ADVANCED 6 FEEDERS

Schneider Electric

Released for Manufacturing
Printed on 2014/03/19

EAV5829303

Projet - No commande Project - Order No.	Indice Rev	Folio Sheet
	00	54

A3 suite - 01/2008

The technical information contained in this document is the exclusive property of Schneider Electric Industries S.A.S and cannot be used or disclosed to third parties of any kind without its written consent. Only those drawings and diagrams marked "certified" are valid for execution. All drawings shown in this document are in open position, drawn out with operating mechanism discharged and all power sources off.

Les informations techniques contenues dans ce document sont la propriete exclusive de Schneider Electric Industries S.A.S et ne peuvent etre utilisees ou divulguees a des tiers quels qu'ils soient sans son accord ecrit. Seuls nous engageant sur ce schéma sont les plans marqués "certifié" et les schémas dessinés en position ouvert - désarmés - débrochés - toutes sources coupées.

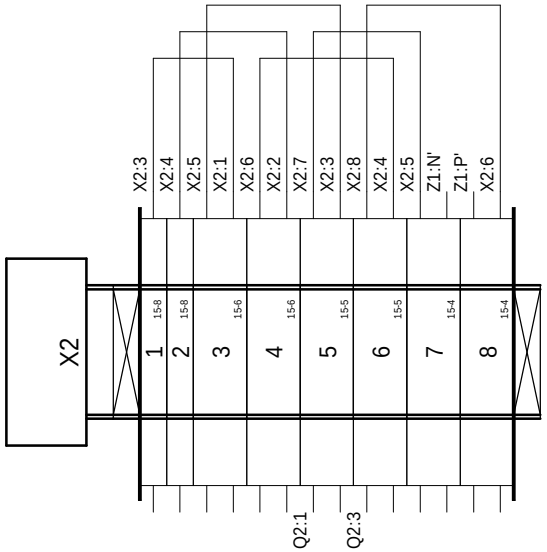

MCC

Ind. Rev	Date Date	Modification / Modification	Archiv. Micro-filmed	Ind. Rev	Date Date	Modification / Modification	Archiv. Micro-filmed
00	17/03/2014	Edition originale / First issue					

TERMINAL BLOCK : =+MCC-X2

GRID MONITORING CONTROL CAB.
(GRID MCC)
ADVANCED 6 FEEDERS

Schneider Electric

Released for Manufacturing
Printed on 2014/03/19

EAV5829303

Projet - No commande / Project - Order No.

Indice Rev: 00

Folio Sheet: 150

Eric_ec_Schneider GRID MCC ADVANCED.tpl

A3 suite - 11/2006

The technical information contained in this document is the exclusive property of Schneider Electric Industries S.A.S and cannot be used or disclosed to third parties of any kind without its written consent. Only those drawings and diagrams marked "released for manufacturing" are to be used for execution. All drawings shown in this document are in open position, drawn out with operating mechanism discharged and all power sources off.

Les informations techniques contenues dans ce document sont la propriete exclusive de Schneider Electric Industries S.A.S et ne peuvent etre utilisees ou divulguees a des tiers quels qu'ils soient sans son accord ecrit. Seuls nous engageant sur ce schéma sont en position ouvert - désarmés - débrochés - toutes sources coupées.

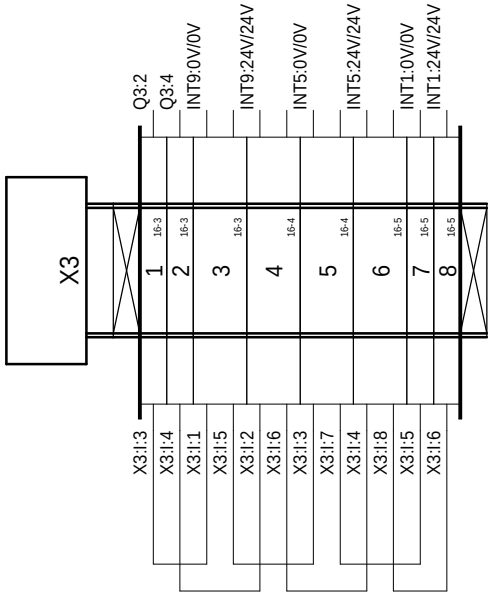

MCC

Ind. Rev	Date Date	Modification / Modification	Archiv. Micro-filmed	Ind. Rev	Date Date	Modification / Modification	Archiv. Micro-filmed
00	17/03/2014	Edition originale / First issue					

TERMINAL BLOCK : =+MCC-X3

GRID MONITORING CONTROL CAB.
(GRID MCC)
ADVANCED 6 FEEDERS

Released for Manufacturing
Printed on 2014/03/19

Schneider Electric

EAV5829303

Projet - No commande / Project - Order No.	Indice Rev	Folio Sheet
	00	151

A3 suite - 11/2006

The technical information contained in this document is the exclusive propery of Schneider Electric Industries S.A.S and cannot be used or disclosed to third parties of any kind without its written consent. Only those drawings and diagrams marked "for construction" or "for execution" may be used for execution. All drawings shown in this document are in open position, drawn out with operating mechanism discharged and all power sources off.

Les informations techniques contenues dans ce document sont la propriete exclusive de Schneider Electric Industries S.A.S et ne peuvent etre utilisees ou divulguees a des tiers quels qu'ils soient sans son accord ecrit. Seuls nous engageant pour ce document, les plans et schemas marqués "a la construction" ou "a l'execution". Les appareils representés sur ce schéma sont en position ouvert - désarmés - débrochés - toutes sources coupées.

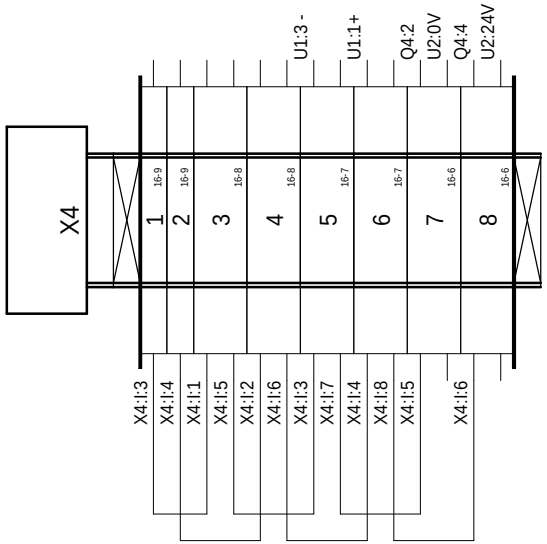

MCC

Ind. Rev	Date Date	Modification / Modification	Archiv. Micro-filmed	Ind. Rev	Date Date	Modification / Modification	Archiv. Micro-filmed
00	17/03/2014	Edition originale / First issue					

TERMINAL BLOCK : =+MCC-X4

GRID MONITORING CONTROL CAB.
(GRID MCC)
ADVANCED 6 FEEDERS

Schneider Electric

Released for Manufacturing
Printed on 2014/03/19

EAV5829303

Projet - No commande
Project - Order No.

Indice Rev 00

Folio Sheet 152

Eric_sc_Schneider GRID MCC ADVANCED.tpl

A3 suite - 11/2006

The technical information contained in this document is the exclusive propery of Schneider Electric Industries S.A.S and cannot be used or disclosed to third parties of any kind without its written consent. Only those drawings and diagrams marked "released for manufacturing" are to be used for execution. All drawings shown in this document are in open position, drawn out with operating mechanism discharged and all power sources off.

Les informations techniques contenues dans ce document sont la propriete exclusive de Schneider Electric Industries S.A.S et ne peuvent etre utilisees ou divulguees a des tiers quels qu'ils soient sans son accord ecrit. Seuls nous engageant sur ce schéma sont en position ouvert - désarmés - débrochés - toutes sources coupées.

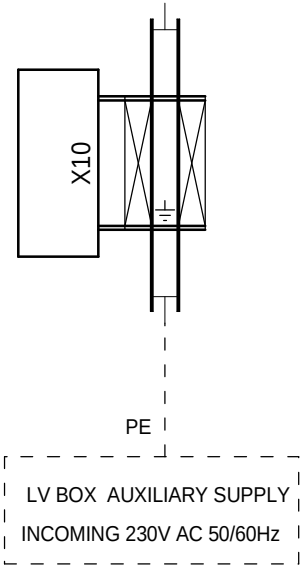

MCC

Ind. Rev	Date Date	Modification / Modification	Archiv. Micro-filmed	Ind. Rev	Date Date	Modification / Modification	Archiv. Micro-filmed
00	17/03/2014	Edition originale / First issue					

TERMINAL BLOCK : =+MCC-X10

GRID MONITORING CONTROL CAB.
(GRID MCC)
ADVANCED 6 FEEDERS

Released for Manufacturing
Printed on 2014/03/19

Schneider Electric

EAV5829303

Projet - No commande / Project - Order No.	Indice Rev	Folio Sheet
	00	153

Eric_sc_Schneider GRID MCC ADVANCED.6F

A3 suite - 11/2006

The technical information contained in this document is the exclusive propery of Schneider Electric Industries S.A.S and cannot be used or disclosed to third parties of any kind without its written consent. Only those drawings and diagrams marked "certified" or "for approval" are valid for execution. All drawings shown in this document are in open position, drawn out with operating mechanism discharged and all power sources off.

Les informations techniques contenues dans ce document sont la propriete exclusive de Schneider Electric Industries S.A.S et ne peuvent etre utilisees ou divulguees a des tiers quels qu'ils soient sans son accord ecrit. Seuls nous engageant sur ce schéma sont en position ouvert - désarmés - débrochés - toutes sources coupées.

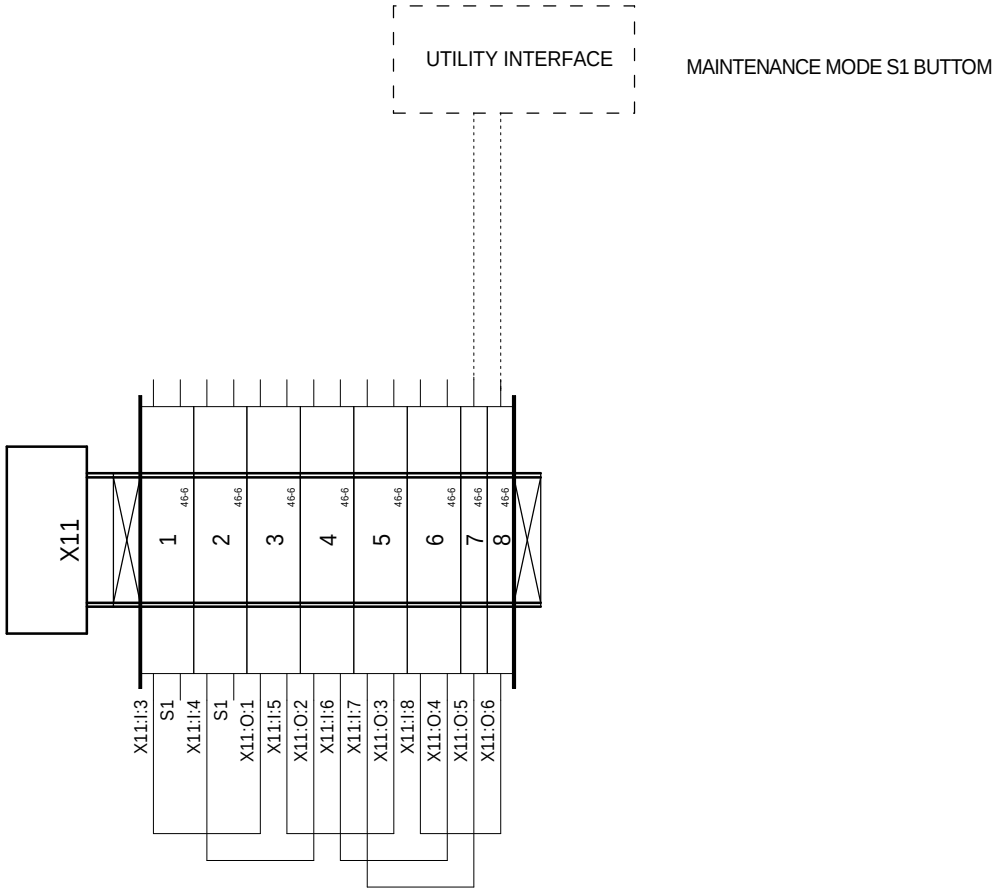

MCC

Ind. Rev	Date Date	Modification / Modification	Archiv. Micro-filmed	Ind. Rev	Date Date	Modification / Modification	Archiv. Micro-filmed
00	17/03/2014	Edition originale / First issue					

TERMINAL BLOCK : =+MCC-X11

GRID MONITORING CONTROL CAB.
(GRID MCC)
ADVANCED 6 FEEDERS

Released for Manufacturing
Printed on 2014/03/19

Schneider Electric

EAV5829303

Projet - No commande / Project - Order No.	Indice Rev	Folio Sheet
	00	154

Eric_sc_Schneider GRID MCC ADVANCED.tpl

A3 suite - 11/2006

The technical information contained in this document is the exclusive propery of Schneider Electric Industries S.A.S and cannot be used or disclosed to third parties of any kind without its written consent. Only those drawings and diagrams marked "certified" or "for execution" are authorized for execution. All drawings shown in this document are in open position, drawn out with operating mechanism discharged and all power sources off.

Les informations techniques contenues dans ce document sont la propriete exclusive de Schneider Electric Industries S.A.S et ne peuvent etre utilisees ou divulguees a des tiers quels qu'ils soient sans son accord ecrit. Seuls nous engageant sur ce schéma sont en position ouvert - désarmés - débrochés - toutes sources coupées.

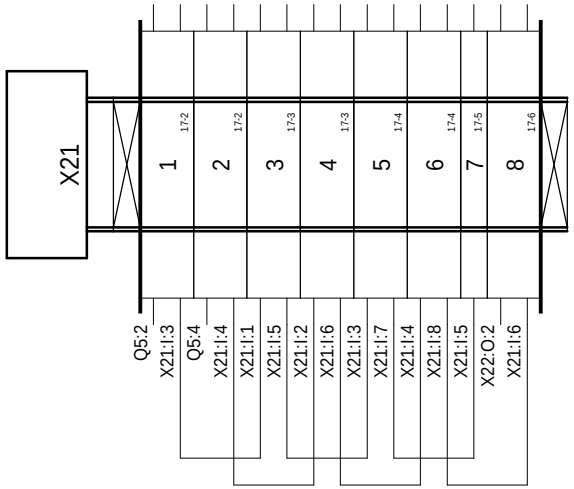

MCC

Ind. Rev	Date Date	Modification / Modification	Archiv. Micro-filmed	Ind. Rev	Date Date	Modification / Modification	Archiv. Micro-filmed
00	17/03/2014	Edition originale / First issue					

TERMINAL BLOCK : =+MCC-X21

GRID MONITORING CONTROL CAB.
(GRID MCC)
ADVANCED 6 FEEDERS

Schneider Electric

Released for Manufacturing
Printed on 2014/03/19

EAV5829303

Projet - No commande
Project - Order No.

Indice Rev 00

Folio Sheet 155

A3 suite - 11/2006

The technical information contained in this document is the exclusive propery of Schneider Electric Industries S.A.S and cannot be used or disclosed to third parties of any kind without its written consent. Only those drawings and diagrams marked "certified" or "for construction" are binding for execution. All drawings shown in this document are in open position, drawn out with operating mechanism discharged and all power sources off.

Les informations techniques contenues dans ce document sont la propriete exclusive de Schneider Electric Industries S.A.S et ne peuvent etre utilisees ou divulguees a des tiers quels qu'ils soient sans son accord ecrit. Seuls nous engageant sont les documents "certifies" ou "pour construire". Les appareils representes sur ce schéma sont en position ouvert - désarmés - débrochés - toutes sources coupées.

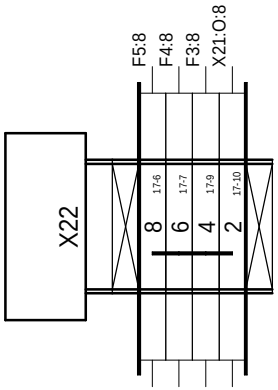

MCC

Ind. Rev	Date Date	Modification / Modification	Archiv. Micro-filmed	Ind. Rev	Date Date	Modification / Modification	Archiv. Micro-filmed
00	17/03/2014	Edition originale / First issue					

TERMINAL BLOCK : =+MCC-X22

GRID MONITORING CONTROL CAB.
(GRID MCC)
ADVANCED 6 FEEDERS

Schneider Electric

Released for Manufacturing
Printed on 2014/03/19

EAV5829303

Projet - No commande / Project - Order No.

Indice Rev: 00

Folio Sheet: 156

A3 suite - 11/2006

The technical information contained in this document is the exclusive propery of Schneider Electric Industries S.A.S and cannot be used or disclosed to third parties of any kind without its written consent. Only those drawings and diagrams marked "certified for order" are to be used for execution. All drawings shown in this document are in open position, drawn out with operating mechanism discharged and all power sources off.

Les informations techniques contenues dans ce document sont la propriete exclusive de Schneider Electric Industries S.A.S et ne peuvent etre utilisees ou divulguees a des tiers quels qu'ils soient sans son accord ecrit. Seuls nous engageant sur ce schéma sont les plans et schemas marqués "bon pour execution". Les appareils représentés sur ce schéma sont en position ouvert - désarmés - débrochés - toutes sources coupées.

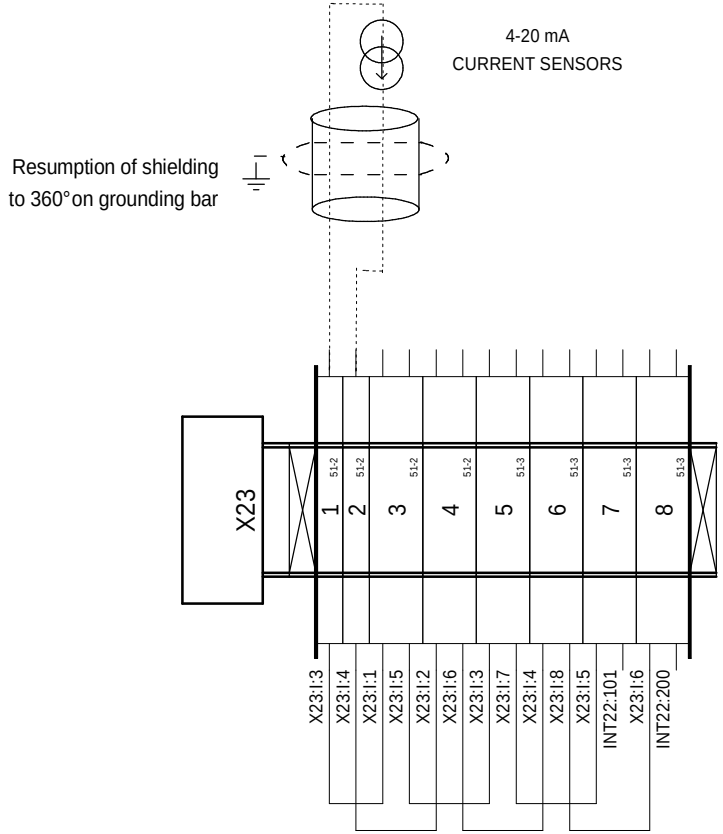

MCC

Ind. Rev	Date Date	Modification / Modification	Archiv. Micro-filmed	Ind. Rev	Date Date	Modification / Modification	Archiv. Micro-filmed
00	17/03/2014	Edition originale / First issue					

TERMINAL BLOCK : =+MCC-X23

GRID MONITORING CONTROL CAB.
(GRID MCC)
ADVANCED 6 FEEDERS

Schneider Electric

Released for Manufacturing
Printed on 2014/03/19

EAV5829303

Projet - No commande / Project - Order No.

Indice Rev: 00

Folio Sheet: 157

A3 suite - 11/2006

The technical information contained in this document is the exclusive propery of Schneider Electric Industries S.A.S and cannot be used or disclosed to third parties of any kind without its written consent. Only those drawings and diagrams marked certified are valid for execution and all drawings shown in this document are in open position, drawn out with operating mechanism discharged and all power sources off.

Les informations techniques contenues dans ce document sont la propriete exclusive de Schneider Electric Industries S.A.S et ne peuvent etre utilisees ou divulguees a des tiers quels qu'ils soient sans son accord ecrit. Seuls nous engageant sur ce schéma sont en position ouvert - désarmés - débrochés - toutes sources coupées.

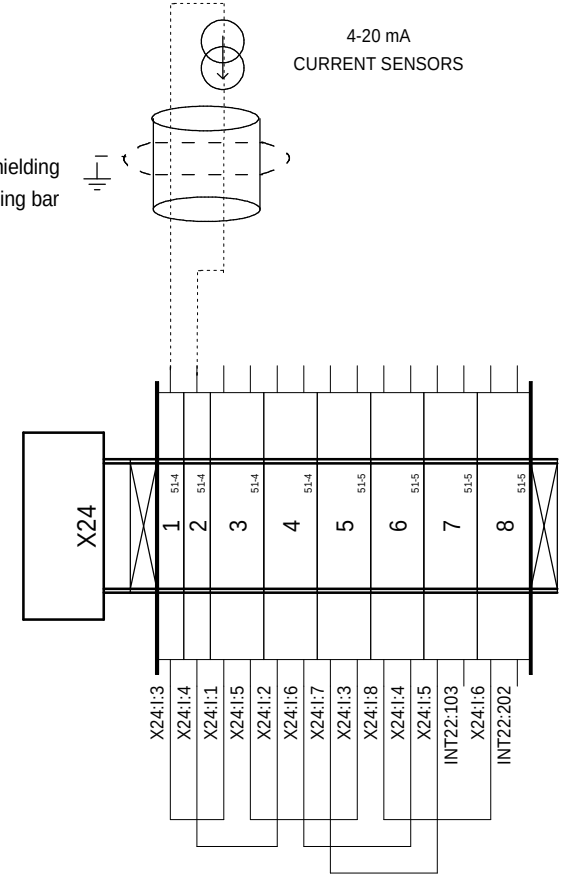

MCC

Ind. Rev	Date Date	Modification / Modification	Archiv. Micro-filmed	Ind. Rev	Date Date	Modification / Modification	Archiv. Micro-filmed
00	17/03/2014	Edition originale / First issue					

TERMINAL BLOCK : =+MCC-X24

GRID MONITORING CONTROL CAB.
(GRID MCC)
ADVANCED 6 FEEDERS

Schneider Electric

Released for Manufacturing
Printed on 2014/03/19

EAV5829303

Projet - No commande / Project - Order No.

Indice Rev: 00

Folio Sheet: 158

A3 suite - 11/2006

The technical information contained in this document is the exclusive property of Schneider Electric Industries S.A.S and cannot be used or disclosed to third parties of any kind without its written consent. Only those drawings and diagrams marked "certified for construction" are to be used for execution. All drawings shown in this document are in open position, drawn out with operating mechanism discharged and all power sources off.

Les informations techniques contenues dans ce document sont la propriete exclusive de Schneider Electric Industries S.A.S et ne peuvent etre utilisees ou divulguees a des tiers quels qu'ils soient sans son accord ecrit. Seuls nous engagent ceux des dessins et schemas marqués "bon pour execution". Les dessins ci-joints sont en position ouverte - désarmés - débrochés - toutes sources coupées.

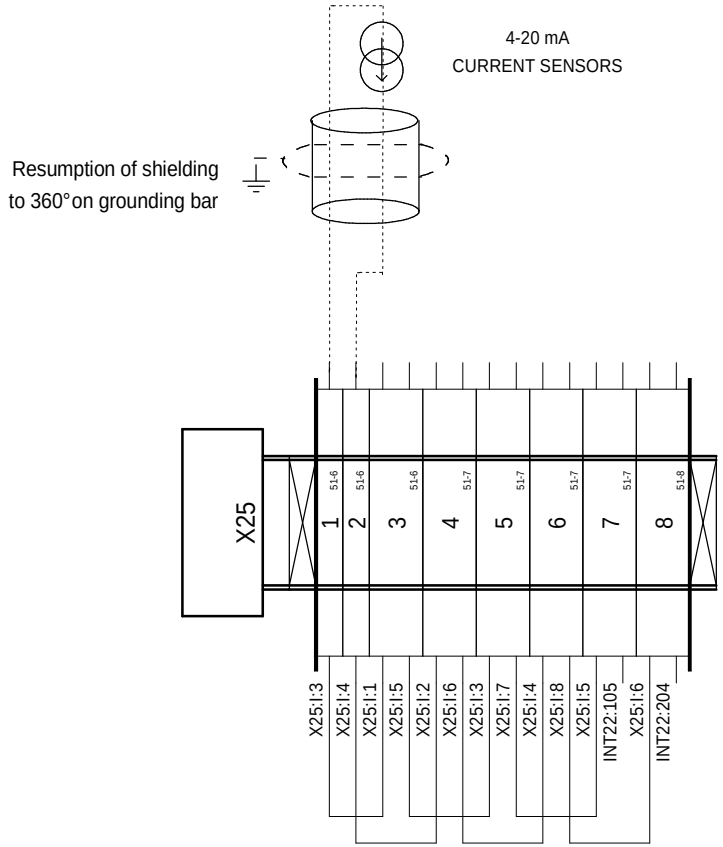

MCC

Ind. Rev	Date Date	Modification / Modification	Archiv. Micro-filmed	Ind. Rev	Date Date	Modification / Modification	Archiv. Micro-filmed
00	17/03/2014	Edition originale / First issue					

TERMINAL BLOCK : =+MCC-X25

GRID MONITORING CONTROL CAB.
(GRID MCC)
ADVANCED 6 FEEDERS

Schneider Electric

Released for Manufacturing
Printed on 2014/03/19

EAV5829303

Projet - No commande
Project - Order No.

Indice Rev 00

Folio Sheet 159

The technical information contained in this document is the exclusive property of Schneider Electric Industries S.A.S and cannot be used or disclosed to third parties of any kind without its written consent. Only those drawings and diagrams marked "certified" are to be used for execution. All drawings shown in this document are in open position, drawn out with operating mechanism discharged and all power sources off.

Les informations techniques contenues dans ce document sont la propriete exclusive de Schneider Electric Industries S.A.S et ne peuvent etre utilisees ou divulguees a des tiers quels qu'ils soient sans son accord ecrit. Seuls nous engageant sur ce schéma sont en position ouvert - désarmés - débrochés - toutes sources coupées.

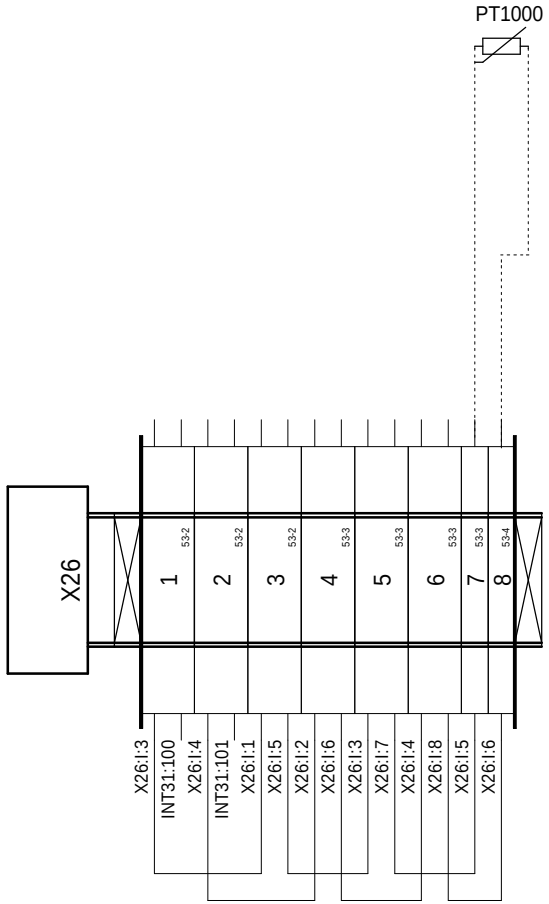

MCC

Ind. Rev	Date Date	Modification / Modification	Archiv. Micro-filmed	Ind. Rev	Date Date	Modification / Modification	Archiv. Micro-filmed
00	17/03/2014	Edition originale / First issue					

TERMINAL BLOCK : =+MCC-X26

GRID MONITORING CONTROL CAB.
(GRID MCC)
ADVANCED 6 FEEDERS

Schneider Electric

Released for Manufacturing
Printed on 2014/03/19

EAV5829303

Projet - No commande / Project - Order No.

Indice Rev: 00

Folio Sheet: 160

A3 suite - 11/2006

The technical information contained in this document is the exclusive property of Schneider Electric Industries S.A.S and cannot be used or disclosed to third parties of any kind without its written consent. Only those drawings and diagrams marked "certified" are to be used for execution and installation purposes. All devices shown in the diagrams are in open position, drawn out with operating mechanism discharged and all power sources off.

Les informations techniques contenues dans ce document sont la propriete exclusive de Schneider Electric Industries S.A.S et ne peuvent etre utilisees ou divulguees a des tiers quels qu'ils soient sans son accord ecrit. Seuls nous engageant sur ce schéma sont en position ouvert - désarmés - débrochés - toutes sources coupées.

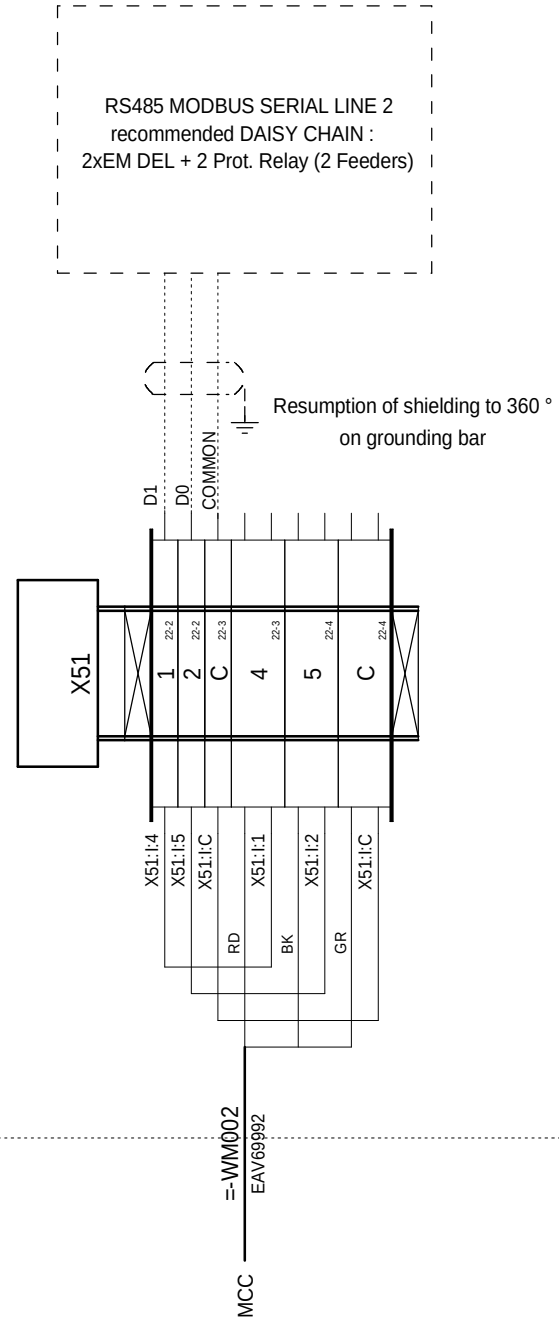

MCC

Ind. Rev	Date Date	Modification / Modification	Archiv. Micro-filmed	Ind. Rev	Date Date	Modification / Modification	Archiv. Micro-filmed
00	17/03/2014	Edition originale / First issue					

TERMINAL BLOCK : =+MCC-X51

GRID MONITORING CONTROL CAB.
(GRID MCC)
ADVANCED 6 FEEDERS

Schneider Electric

Released for Manufacturing
Printed on 2014/03/19

EAV5829303

Projet - No commande
Project - Order No.

Indice Rev 00

Folio Sheet 161

A3 suite - 11/2006

The technical information contained in this document is the exclusive property of Schneider Electric Industries S.A.S and cannot be used or disclosed to third parties of any kind without its written consent. Only those drawings and diagrams marked "released for order" are valid for execution. All drawings shown in this document are in open position, drawn out with operating mechanism discharged and all power sources off.

Les informations techniques contenues dans ce document sont la propriete exclusive de Schneider Electric Industries S.A.S et ne peuvent etre utilisees ou divulguees a des tiers quels qu'ils soient sans son accord ecrit. Seuls nous engageant sur ce schéma sont en position ouvert - désarmés - débrochés - toutes sources coupées.

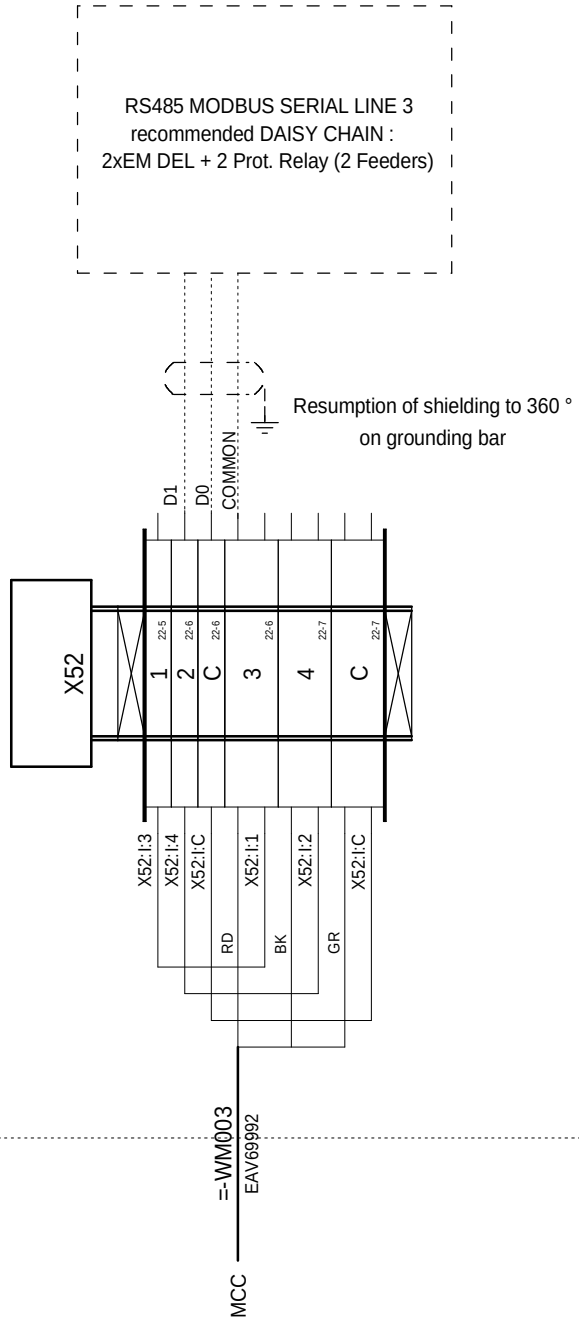

MCC

Ind. Rev	Date Date	Modification / Modification	Archiv. Micro-filmed	Ind. Rev	Date Date	Modification / Modification	Archiv. Micro-filmed
00	17/03/2014	Edition originale / First issue					

TERMINAL BLOCK : =+MCC-X52

GRID MONITORING CONTROL CAB.
(GRID MCC)
ADVANCED 6 FEEDERS

Schneider Electric

Released for Manufacturing
Printed on 2014/03/19

EAV5829303

Projet - No commande
Project - Order No.

Indice Rev 00

Folio Sheet 162

The technical information contained in this document is the exclusive property of Schneider Electric Industries S.A.S and cannot be used or disclosed to third parties of any kind without its written consent. Only those drawings and diagrams marked "released for manufacturing" are to be used for execution. All drawings shown in this document are in open position, drawn out with operating mechanism discharged and all power sources off.

Les informations techniques contenues dans ce document sont la propriete exclusive de Schneider Electric Industries S.A.S et ne peuvent etre utilisees ou divulguees a des tiers quels qu'ils soient sans son accord ecrit. Seuls nous engageant sur ce schéma sont en position ouvert - désarmés - débrochés - toutes sources coupées.

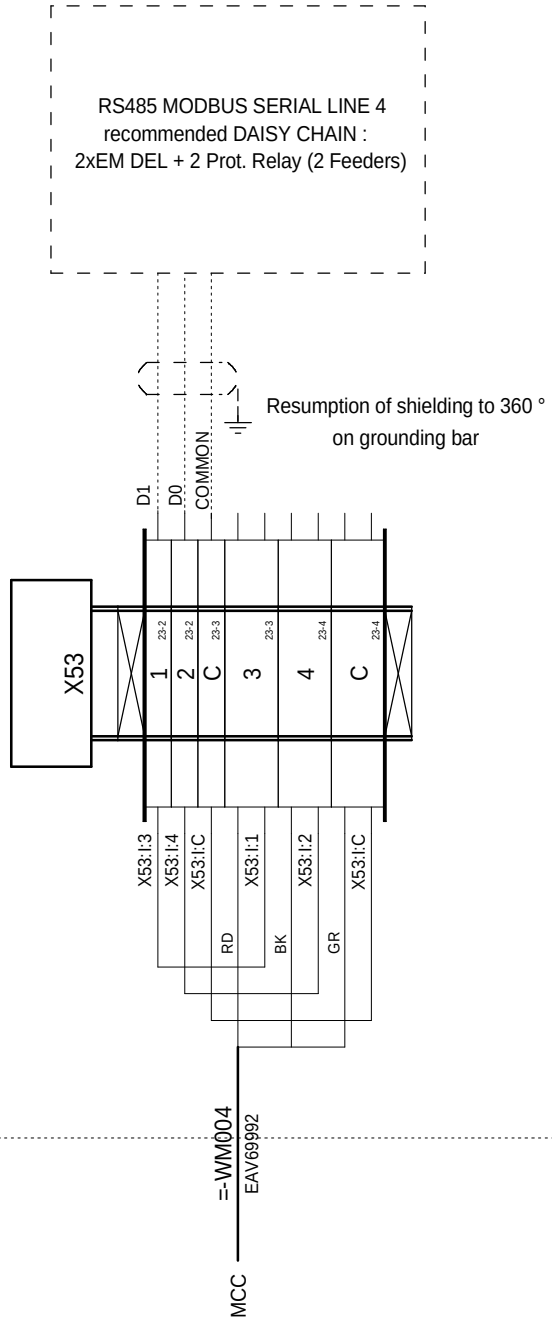

MCC

Ind. Rev	Date Date	Modification / Modification	Archiv. Micro-filmed	Ind. Rev	Date Date	Modification / Modification	Archiv. Micro-filmed
00	17/03/2014	Edition originale / First issue					

TERMINAL BLOCK : =+MCC-X53

GRID MONITORING CONTROL CAB.
(GRID MCC)
ADVANCED 6 FEEDERS

Schneider Electric

Released for Manufacturing
Printed on 2014/03/19

EAV5829303

Projet - No commande / Project - Order No.	Indice Rev	Folio Sheet
	00	163

The technical information contained in this document is the exclusive propery of Schneider Electric Industries S.A.S and cannot be used or disclosed to third parties of any kind without its written consent. Only those drawings and diagrams marked "released for manufacturing" are to be used for execution. All devices shown in this diagram are in open position, drawn out with operating mechanism discharged and all power sources off.

Les informations techniques contenues dans ce document sont la propriete exclusive de Schneider Electric Industries S.A.S et ne peuvent etre utilisees ou divulguees a des tiers quels qu'ils soient sans son accord ecrit. Seuls nous engageant sur ce schéma sont en position ouvert - désarmés - débrochés - toutes sources coupées.

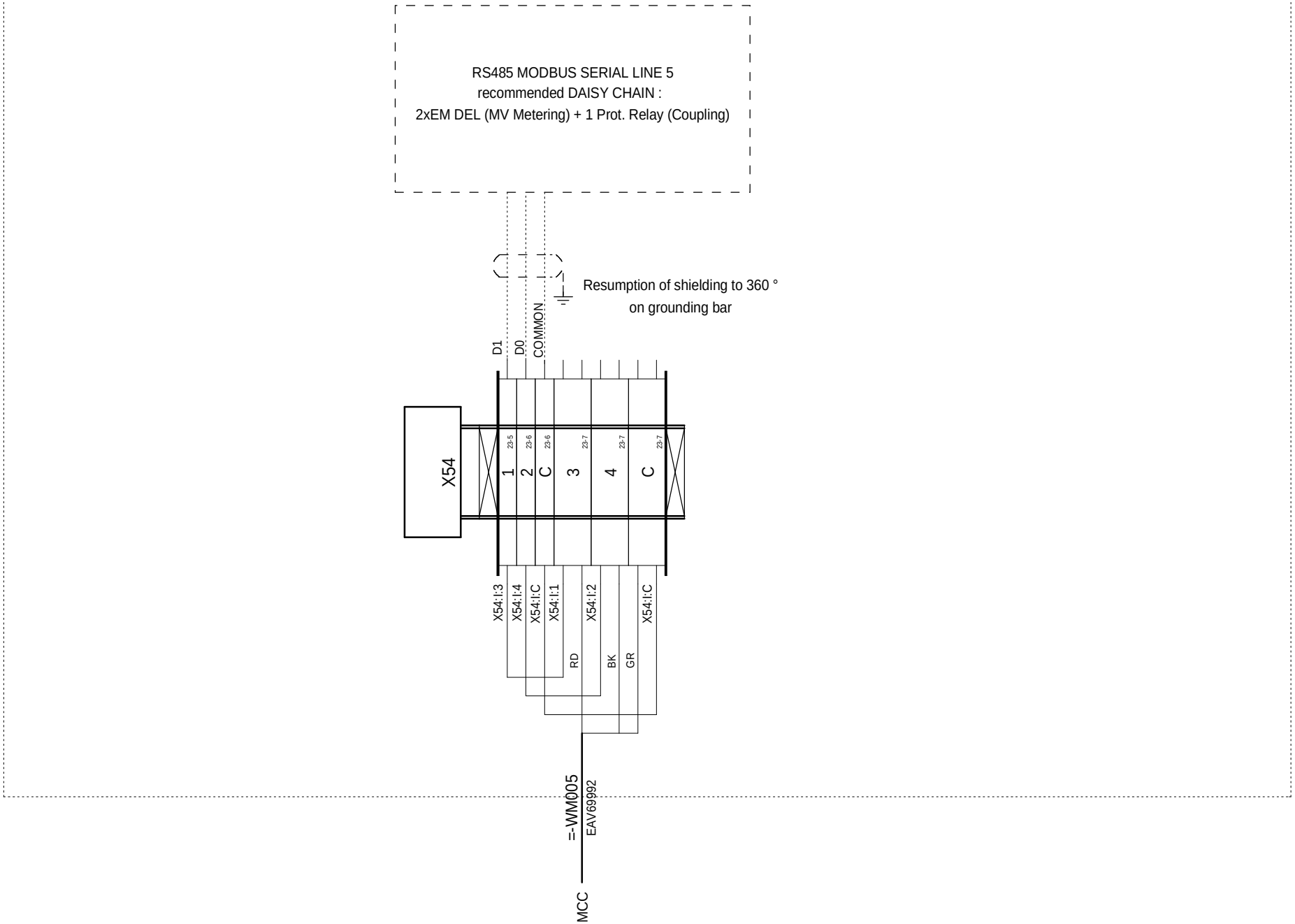

MCC

Ind. Rev	Date Date	Modification / Modification	Archiv. Micro-filmed	Ind. Rev	Date Date	Modification / Modification	Archiv. Micro-filmed
00	17/03/2014	Edition originale / First issue					

TERMINAL BLOCK : =+MCC-X54

GRID MONITORING CONTROL CAB.
(GRID MCC)
ADVANCED 6 FEEDERS

Schneider Electric

Released for Manufacturing
Printed on 2014/03/19

EAV5829303

Projet - No commande
Project - Order No.

Indice Rev 00

Folio Sheet 164

Nom composant / Component name: Localisation (Location)	Installation (Function)	Repère (Tag)	Page (Sheet)	Designation	Fabricant (Manufacturer)	Ref. fabricant (Manufacturer Ref.)
MCC		24V DC HARNESS	15	H07VK POWER SUPPLY HARNESS Q1 to Z1	COMMATEL	EAV69249
			15	H07VK POWER SUPPLY HARNESS Z1 to X5 via X2	COMMATEL	EAV69250
			15	H07VK 6 FEEDERS ALL POWER SUPPLY HARNESS (after X5)	COMMATEL	EAV69251
			15	H07VK POWER SUPPLY HARNESS X11 to S1	COMMATEL	EAV69252
			15	H07VK POWER SUPPLY HARNESS X26 to INT31, F6 to INT31, X21-22 to F1, F2, F3, F4, F5 and INT21	COMMATEL	EAV69254
			15	H07VK POWER SUPPLY HARNESS X23-24-25 to INT22	COMMATEL	EAV69255
		230V AC HARNESS	18	H07VK POWER SUPPLY HARNESS Q8 to R1 via H1	COMMATEL	EAV68531
		AMI1	24	HARD 8 ISOLATED CHANNELS ANALOG INPUTS MODULE for Current and Voltage Sensors,28-way spring removable terminal	SCHNEIDER ELECTRIC	BMX AMI 0810H
		AMI2	24	HARD 8 ISOLATED CHANNELS ANALOG INPUTS MODULE for Current and Voltage Sensors,28-way spring removable terminal	SCHNEIDER ELECTRIC	BMX AMI 0810H
		AMO1	24	HARD 4 CHANNELS ISOLATED ANALOG OUTPUTS MODULE, 10V 0-20mA 4-20mA, 28-way spring terminal block	SCHNEIDER ELECTRIC	BMX AMO 0410H
		AP1R0	24	HARH 12 SLOTS RACK	SCHNEIDER ELECTRIC	BMX XBP 1200H
			24	SHIELD KIT Size1 WIRE CLAMP for 5...11 mm² cable	SCHNEIDER ELECTRIC	STB XSP 3020
			24	12 SLOTS SHIELD KIT	SCHNEIDER ELECTRIC	BMX XSP 1200
		ART1	24	HARSH 4 ISOLATED CHANNELS ANALOG INPUTS for Thermosensors and Thermocouples, Connector 40 pins	SCHNEIDER ELECTRIC	BMX ART 0414H
		CPS1	24	HARD 24VDC ISOLATED POWER SUPPLY MODULE, 24/48VDC, 3.3VDC 4.5A, 24VDC 1.3A	SCHNEIDER ELECTRIC	BMX CPS 3020H
		CPU1	24	HARD 4096K RAM Processor Module, 10BASE-T/100BASE-TX (RJ45) ,Serial Port, USB Port	SCHNEIDER ELECTRIC	BMX P34 2020H
			24	128 MB Memory Card	SCHNEIDER ELECTRIC	BMX RMS 128MPF
		DDI1	24	24VDC 64 Channels DIGITAL INPUTS MODULE, two Connectors 40 pins	SCHNEIDER ELECTRIC	BMX DDI 6402K
		DDI2	24	24VDC 64 Channels DIGITAL INPUTS MODULE, two Connectors 40 pins	SCHNEIDER ELECTRIC	BMX DDI 6402K
		DDO1	24	24VDC 0.1A 64 Channels DIGITAL OUPUTS MODULE, two Connectors 40 pins	SCHNEIDER ELECTRIC	BMX DDO 6402K
		EARTHING HARNESS	15	H07VK EARTHING HARNESS INT21	COMMATEL	EAV69987
			15	H07VK EARTHING HARNESS INT22	COMMATEL	EAV69988
			15	H07VK EARTHING HARNESS INT31	COMMATEL	EAV69989
			15	H07VK EARTHING HARNESS INT41	COMMATEL	EAV69990
			15	H07VK EARTHING HARNESS U1	COMMATEL	EAV51269
			15	H07VK EARTHING HARNESS U2	COMMATEL	EAV69970
			15	H07VK EARTHING HARNESS Z1	COMMATEL	EAV51862
		F1	49	PROTECTIVE PLUG PT,2-core floating signal circuit protective circuit, In:10kA (8/20)-Uc:28VDC	PHOENIX CONTACT	2856032
			49	BASE ELEMENT FOR SURGE PROTECTION PLUG (protective circuit for a 2-core floating signal circuit)	PHOENIX CONTACT	2856113
		F2	49	PROTECTIVE PLUG PT,2-core floating signal circuit protective circuit, In:10kA (8/20)-Uc:28VDC	PHOENIX CONTACT	2856032
			49	BASE ELEMENT FOR SURGE PROTECTION PLUG (protective circuit for a 2-core floating signal circuit)	PHOENIX CONTACT	2856113
		F3	49	PROTECTIVE PLUG PT,2-core floating signal circuit protective circuit, In:10kA (8/20)-Uc:28VDC	PHOENIX CONTACT	2856032
			49	BASE ELEMENT FOR SURGE PROTECTION PLUG (protective circuit for a 2-core floating signal circuit)	PHOENIX CONTACT	2856113
		F4	49	PROTECTIVE PLUG PT,2-core floating signal circuit protective circuit, In:10kA (8/20)-Uc:28VDC	PHOENIX CONTACT	2856032
			49	BASE ELEMENT FOR SURGE PROTECTION PLUG (protective circuit for a 2-core floating signal circuit)	PHOENIX CONTACT	2856113
		F5	50	PROTECTIVE PLUG PT,2-core floating signal circuit protective circuit, In:10kA (8/20)-Uc:28VDC	PHOENIX CONTACT	2856032
			50	BASE ELEMENT FOR SURGE PROTECTION PLUG (protective circuit for a 2-core floating signal circuit)	PHOENIX CONTACT	2856113
		F6	53	PROTECTIVE PLUG PT, 4-core floating signal circuit protective circuit, In:10kA (8/20)-Uc:27VDC	PHOENIX CONTACT	2839240
			53	BASE ELEMENT FOR PROTECTIVE PLUG PT (4-core floating signal circuit protective circuit)	PHOENIX CONTACT	2839402
		H1	18	ELECTRONIC HYGROTHERM, HUMIDITY RANGE : 10-95%RH, SUPPLY VOLTAGE : 240VAC - 50/60Hz	SCHNEIDER ELECTRIC	NSYCCOHYT230VID
		INT1	25	PASSIVE INSULATED 16 CHANNELS DIGITAL I/O CONNECTION SUB-BASE, HE10 20 pins	SCHNEIDER ELECTRIC	ABE 7H16S21
		INT2	27	PASSIVE INSULATED 16 CHANNELS DIGITAL I/O CONNECTION SUB-BASE, HE10 20 pins	SCHNEIDER ELECTRIC	ABE 7H16S21
		INT3	29	PASSIVE INSULATED 16 CHANNELS DIGITAL I/O CONNECTION SUB-BASE, HE10 20 pins	SCHNEIDER ELECTRIC	ABE 7H16S21
		INT4	31	PASSIVE INSULATED 16 CHANNELS DIGITAL I/O CONNECTION SUB-BASE, HE10 20 pins	SCHNEIDER ELECTRIC	ABE 7H16S21
		INT5	33	PASSIVE INSULATED 16 CHANNELS DIGITAL I/O CONNECTION SUB-BASE, HE10 20 pins	SCHNEIDER ELECTRIC	ABE 7H16S21
		INT6	35	PASSIVE INSULATED 16 CHANNELS DIGITAL I/O CONNECTION SUB-BASE, HE10 20 pins	SCHNEIDER ELECTRIC	ABE 7H16S21
		INT7	37	PASSIVE INSULATED 16 CHANNELS DIGITAL I/O CONNECTION SUB-BASE, HE10 20 pins	SCHNEIDER ELECTRIC	ABE 7H16S21
		INT8	39	PASSIVE INSULATED 16 CHANNELS DIGITAL I/O CONNECTION SUB-BASE, HE10 20 pins	SCHNEIDER ELECTRIC	ABE 7H16S21
		INT9	41	16 CHANNELS 5A ELECTROMECHANICAL RELAY OUTPUT CONNECTION SUB-BASE, HE10 20 pins, fixed relays	SCHNEIDER ELECTRIC	ABE 7R16S210
		INT10	43	16 CHANNELS 5A ELECTROMECHANICAL RELAY OUTPUT CONNECTION SUB-BASE, HE10 20 pins, fixed relays	SCHNEIDER ELECTRIC	ABE 7R16S210

The technical information contained in this document is the exclusive property of Schneider Electric Industries S.A.S and cannot be used or disclosed to third parties of any kind without its written consent. Only those drawings and documents explicitly referred to in the contract are binding for everyone. All drawings shown in this document are in open position, drawn out with operating mechanism discharged and all power sources off.

Les informations techniques contenues dans ce document sont la propriete exclusive de Schneider Electric Industries S.A.S et ne peuvent etre utilisees ou divulguees a des tiers quels qu'ils soient sans son accord ecrit. Seuls nous engageant les documents explicitement mentionnes dans le contrat. Les dessins ci-dessous sont en position ouvert - désarmés - débrochés - toutes sources coupées, sur ce schéma sont en position ouvert - désarmés - débrochés - toutes sources coupées.

Ind. (Rev)	Date	Modification / Modification	Archiv. (Micro-filmed)	Ind. (Rev)	Date	Modification / Modification	Archiv. (Micro-filmed)
00	17/03/2014	Edition originale / First issue					

EQUIPMENT LIST

GRID MONITORING CONTROL CAB.
(GRID MCC)
ADVANCED 6 FEEDERS

Schneider Electric

Released for Manufacturing
Printed on 2014/03/19

EAV5829303

Projet - No commande (Project - Order No.)

Indice (Rev): 00

Folio (Sheet): 500

Nom composant / Component name: Localisation (Location)	Installation (Function)	Repère (Tag)	Page (Sheet)	Designation	Fabricant (Manufacturer)	Ref. fabricant (Manufacturer Ref.)
		INT11	45	SUB-BASE WITH ELECTROMECHANICAL RELAYS 16 CHANNELS, HE10 20 pins,plug-in relays	SCHNEIDER ELECTRIC	ABE 7R16T330
		INT12	47	SUB-BASE WITH ELECTROMECHANICAL RELAYS 16 CHANNELS, HE10 20 pins,plug-in relays	SCHNEIDER ELECTRIC	ABE 7R16T330
		INT21	49	8 CHANNELS ANALOG CONNECTION SUB-BASE 8E±10V,0-10V,0-5V,1-5V,±5V,0-20mA,4-20mA,±20mA sensors,25ways Sub-D Conn	SCHNEIDER ELECTRIC	ABE 7CPA02
		INT22	51	8 CHANNELS ANALOG CONNECTION SUB-BASE 8E±10V,0-10V,0-5V,1-5V,±5V,0-20mA,4-20mA,±20mA sensors,25ways Sub-D Conn	SCHNEIDER ELECTRIC	ABE 7CPA02
		INT31	53	4 CHANNELS SUB-BASE ANALOG CONNECTION FOR THERMOCOUPLES AND THERMOSENSORS, D SUB 25 pins	SCHNEIDER ELECTRIC	ABE 7CPA412
			53	2 POLES GREY TERMINAL BLOCK INSERTION BRIDGE EB 2-10, 10.16 mm pitch	PHOENIX CONTACT	0203153
		INT41	54	4 CHANNELS CONNEXION SUB-BASE CURRENTS/VOLTAGE OUTPUTS, 25 ways SUB-D Connector	SCHNEIDER ELECTRIC	ABE 7CPA21
		NOE1	24	HARSH 10/100Mbit/s ETHERNET TCP/IP NETWORK MODULE, 10Base-TX/100Base-TX (RJ45) port	SCHNEIDER ELECTRIC	BMX NOE 0110H
		NOM1	24	HARSH RS485 MODBUS SERIAL MODULE, 2 RJ45 Ports	SCHNEIDER ELECTRIC	BMX NOM 0200H
		NOM2	24	HARSH RS485 MODBUS SERIAL MODULE, 2 RJ45 Ports	SCHNEIDER ELECTRIC	BMX NOM 0200H
		NOR1	24	HARSH RTU COMMUNICATION MODULE,10Base-TX/100Base-TX Port (RJ45), Serial Port (RJ45)	SCHNEIDER ELECTRIC	BMX NOR 0200H
		Q1	15	iSW SWITCH-DISCONNECTOR 415V AC/DC 2P 40A	SCHNEIDER ELECTRIC	A9S60240
		Q2	16	MINIATURE CIRCUIT BREAKER FOR DC VOLTAGE C60H-DC 2 POLES 3A	SCHNEIDER ELECTRIC	A9N61523
		Q3	16	MINIATURE CIRCUIT BREAKER FOR DC VOLTAGE C60H-DC 2 POLES 2A	SCHNEIDER ELECTRIC	A9N61522
		Q4	16	MINIATURE CIRCUIT BREAKER FOR DC VOLTAGE C60H-DC 2 POLES 2A	SCHNEIDER ELECTRIC	A9N61522
		Q5	16	MINIATURE CIRCUIT BREAKER FOR DC VOLTAGE C60H-DC 2 POLES 2A	SCHNEIDER ELECTRIC	A9N61522
		Q8	18	iC60N CIRCUIT-BREAKER 2P 3A, 440VAC/25kA 133VDC/6kA, CURVE D	SCHNEIDER ELECTRIC	A9F75203
		R1	18	INSULATED RESISTANCE HEATER WITH FAN, NOMINAL POWER : 170W - NOMINAL VOLTAGE : 230VAC	SCHNEIDER ELECTRIC	NSYCR170W230VVC
		S1	46	BLACK SELECTOR SWITCH d=22 HANDLE 2 POSITIONS , 1NO	SCHNEIDER ELECTRIC	XB4BD21
			46	CONTACT 1NO	SCHNEIDER ELECTRIC	ZBE101
		U1	20	SWITCH ETHERNET 14 PORTS 10/100 TX ET 2 PORTS 100 FX-MM (Multi-Mode Fiber)	SCHNEIDER ELECTRIC	TCSESM163F2CU0
		U2	21	RS485 MODBUS RTU ISOLATED DEVICE, Screw Terminal Block, RJ45 Ports	SCHNEIDER ELECTRIC	TWD XCA ISO
		WET001	20	HARNESS of 3 S/FTP Cat6A SHIELDED ETHERNET AP1R0 à U1 CORDS, 4-Twisted Pair, Gray LSZH sheath, RJ45 Connectors	COMMATEL	EAV69991
		WET002	20	HARNESS of 3 S/FTP Cat6A SHIELDED ETHERNET AP1R0 à U1 CORDS, 4-Twisted Pair, Gray LSZH sheath, RJ45 Connectors	COMMATEL	EAV69991
		WET003	20	HARNESS of 3 S/FTP Cat6A SHIELDED ETHERNET AP1R0 à U1 CORDS, 4-Twisted Pair, Gray LSZH sheath, RJ45 Connectors	COMMATEL	EAV69991
		WINT1	25	PRE-FORMED CONNECTING CORD FOR DIGITAL I/O BMX* MODULE, Connectors FCN 40pins and 2xHE10 20pins	SCHNEIDER ELECTRIC	BMX FCC 103
		WINT2	29	PRE-FORMED CONNECTING CORD FOR DIGITAL I/O BMX* MODULE, Connectors FCN 40pins and 2xHE10 20pins	SCHNEIDER ELECTRIC	BMX FCC 203
		WINT3	33	PRE-FORMED CONNECTING CORD FOR DIGITAL I/O BMX* MODULE, Connectors FCN 40pins and 2xHE10 20pins	SCHNEIDER ELECTRIC	BMX FCC 203
		WINT4	37	PRE-FORMED CONNECTING CORD FOR DIGITAL I/O BMX* MODULE, Connectors FCN 40pins and 2xHE10 20pins	SCHNEIDER ELECTRIC	BMX FCC 203
		WINT5	41	PRE-FORMED CONNECTING CORD FOR DIGITAL I/O BMX* MODULE, Connectors FCN 40pins and 2xHE10 20pins	SCHNEIDER ELECTRIC	BMX FCC 103
		WINT6	45	PRE-FORMED CONNECTING CORD FOR DIGITAL I/O BMX* MODULE, Connectors FCN 40pins and 2xHE10 20pins	SCHNEIDER ELECTRIC	BMX FCC 203
		WINT21	49	PRE-FORMED CONNEXION CORD FOR ANALOG BMX AMO or AMI 08*0, 28-way terminal block and 25 way SUD-D connector	SCHNEIDER ELECTRIC	BMX FTA300
		WINT22	51	PRE-FORMED CONNEXION CORD FOR ANALOG BMX AMO or AMI 08*0, 28-way terminal block and 25 way SUD-D connector	SCHNEIDER ELECTRIC	BMX FTA300
		WINT31	53	PRE-FORMED CONNECTING CORD FOR ANALOG BMX ART * MODULE, Connectors FCN 40pins and D Sub 25pins	SCHNEIDER ELECTRIC	BMX FCA152
		WINT41	54	PRE-FORMED CONNEXION CORD FOR ANALOG BMX AMO or AMI 08*0, 28-way terminal block and 25 way SUD-D connector	SCHNEIDER ELECTRIC	BMX FCA300
		WM001	21	HARNESS OF 5 OUTER BRAIDED SHIELD RS485 MODBUS CORDS, CLASS 6A S/FTP, Tierce 0.34², RJ45 Connector	COMMATEL	EAV69992
		WM002	22	HARNESS OF 5 OUTER BRAIDED SHIELD RS485 MODBUS CORDS, CLASS 6A S/FTP, Tierce 0.34², RJ45 Connector	COMMATEL	EAV69992
		WM003	22	HARNESS OF 5 OUTER BRAIDED SHIELD RS485 MODBUS CORDS, CLASS 6A S/FTP, Tierce 0.34², RJ45 Connector	COMMATEL	EAV69992
		WM004	23	HARNESS OF 5 OUTER BRAIDED SHIELD RS485 MODBUS CORDS, CLASS 6A S/FTP, Tierce 0.34², RJ45 Connector	COMMATEL	EAV69992
		WM005	23	HARNESS OF 5 OUTER BRAIDED SHIELD RS485 MODBUS CORDS, CLASS 6A S/FTP, Tierce 0.34², RJ45 Connector	COMMATEL	EAV69992
		WO001	19	MULTIMOD 50/125µm 2.8mm ZIPCORD CORD, SC-PC/SC-PC Connectors, GREY, 2m	FOLAN	502102221N
		WO002	19	MULTIMOD 50/125µm 2.8mm ZIPCORD CORD, SC-PC/SC-PC Connectors, GREY, 2m	FOLAN	502102221N
		X2	150	4 Points TERMINAL ARISES, 2.5mm2 , Grey	SCHNEIDER ELECTRIC	NSYTRR24
		X3	151	4 Points TERMINAL ARISES, 2.5mm2 , Grey	SCHNEIDER ELECTRIC	NSYTRR24
		X4	152	4 Points TERMINAL ARISES, 2.5mm2 , Grey	SCHNEIDER ELECTRIC	NSYTRR24
		X5	16	CUTTABLE COMB BUSBAR 2P 100A 12 MODULES	SCHNEIDER ELECTRIC	A9XPH212
			16	SET OF 4 CONNECTORS, 100A monoconnect	SCHNEIDER ELECTRIC	A9XPCM04
			16	COMB BUSBAR SIDE COVER	SCHNEIDER ELECTRIC	A9XPE210
		X10	153	2 Points TERMINAL ARISES PE, 2.5mm2, Yellow-Green	SCHNEIDER ELECTRIC	NSYTRR22PE
		X11	154	4 Points TERMINAL ARISES, 2.5mm2 , Grey	SCHNEIDER ELECTRIC	NSYTRR24

The technical information contained in this document is the exclusive property of Schneider Electric Industries S.A.S and cannot be used or disclosed to third parties of any kind without its written consent. Only those drawings and documents explicitly agreed upon in writing are valid. All drawings shown in this document are in open position, drawn out with operating mechanism discharged and all power sources off.

Les informations techniques contenues dans ce document sont la propriete exclusive de Schneider Electric Industries S.A.S et ne peuvent etre utilisees ou divulguees a des tiers quels qu'ils soient sans son accord ecrit. Seuls nous engageant sur ce document les plages et schemas ainsi agreables par ecrit. Tous les appareils representes sur ce schéma sont en position ouvert - désarmés - débrochés - toutes sources coupées.

Ind. (Rev)	Date		Archiv. (Micro-filmed)	Ind. (Rev)	Date	Modification / Modification	Archiv. (Micro-filmed)
00	17/03/2014	Edition originale / First issue					

EQUIPMENT LIST

GRID MONITORING CONTROL CAB.
(GRID MCC)
ADVANCED 6 FEEDERS

Schneider Electric

Released for Manufacturing
Printed on 2014/03/19

EAV5829303

Projet - No commande (Project - Order No.)	Indice (Rev)	Folio (Sheet)
	00	501

Nom composant / Component name: Localisation (Location)	Installation (Function)	Repère (Tag)	Page (Sheet)	Designation	Fabricant (Manufacturer)	Ref. fabricant (Manufacturer Ref.)
		X21	155	4 Points TERMINAL ARISES, 2.5mm2 , Grey	SCHNEIDER ELECTRIC	NSYTRR24
				INSULATED BRIDGE TERMINAL BLOCKS, 2 Poles, Red	SCHNEIDER ELECTRIC	NSYTRAL22
		X22	156	4 Points TERMINAL ARISES, 2.5mm2 , Grey	SCHNEIDER ELECTRIC	NSYTRR24
		X23	157	4 Points TERMINAL ARISES, 2.5mm2 , Grey	SCHNEIDER ELECTRIC	NSYTRR24
		X24	158	4 Points TERMINAL ARISES, 2.5mm2 , Grey	SCHNEIDER ELECTRIC	NSYTRR24
		X25	159	4 Points TERMINAL ARISES, 2.5mm2 , Grey	SCHNEIDER ELECTRIC	NSYTRR24
		X26	160	4 Points TERMINAL ARISES, 2.5mm2 , Grey	SCHNEIDER ELECTRIC	NSYTRR24
		X51	161	2 Points TERMINAL ARISES, 1.5mm², Grey	PHOENIX CONTACT	3031076
		X52	162	2 Points TERMINAL ARISES, 1.5mm², Grey	PHOENIX CONTACT	3031076
		X53	163	2 Points TERMINAL ARISES, 1.5mm², Grey	PHOENIX CONTACT	3031076
		X54	164	2 Points TERMINAL ARISES, 1.5mm², Grey	PHOENIX CONTACT	3031076
		XFO1	19	MALAGA BOX 8SC, 5 harness grommets	FOLAN	621131001
			19	MOUNTED SC-PC MULTIMOD FITTING	FOLAN	211011023
			19	8 SPLICES BOX	FOLAN	359031021
			19	MOUNTED MULTIMOD PIGTAILS 50/125µm 2.8mm, SC-PC Connector, yellow, 1m	FOLAN	511102063N
		Z1	15	EMI FILTER, Rated Current 6A	SCHAFFNER	FN 2090-6-06

The technical information contained in this document is the exclusive property of Schneider Electric Industries S.A.S and cannot be used or disclosed to third parties of any kind without its written consent. Only those drawings and diagrams printed after order have an authorised status. All devices shown in this diagram are in open position, drawn out with operating mechanism discharged and all power sources off.

Les informations techniques contenues dans ce document sont la propriete exclusive de Schneider Electric Industries S.A.S et ne peuvent etre utilisees ou divulguees a des tiers quels qu'ils soient sans son accord ecrit. Seuls nous engageant sur ce document, les plans et schemas imprimes apres la commande. Les appareils representes sur ce schéma sont en position ouvert - désarmés - débrochés - toutes sources coupées.

Ind. (Rev)	Date (Date)	Modification / Modification	Archiv. (Micro-filmed)	Ind. (Rev)	Date (Date)	Modification / Modification	Archiv. (Micro-filmed)
00	17/03/2014	Edition originale / First issue					

EQUIPMENT LIST

GRID MONITORING CONTROL CAB.
(GRID MCC)
ADVANCED 6 FEEDERS

Schneider Electric

Released for Manufacturing
Printed on 2014/03/19

EAV5829303

Projet - No commande (Project - Order No.)	Indice (Rev)	Folio (Sheet)
	00	502

Eric_sc_Schneider GRID MCC ADVANCED.6F

A3 suite - 11/2006